INSTITUTE OF AERONAUTICAL ENGINEERING

(Autonomous)

(Approved by AICTE | NAAC Accreditation with 'A' Grade | Accredited by NBA | Affiliated to JNTUH)

Dundigal, Hyderabad - 500 043, Telangana

OUTCOME BASED EDUCATION
WITH
CHOICE BASED CREDIT SYSTEM

BACHELOR OF TECHNOLOGY
COMPUTER SCIENCE AND ENGINEERING

ACADEMIC REGULATIONS, COURSE CATALOGUE and SYLLABUS
BT23

B.Tech Regular Four Year Degree Program
(for the batches admitted from the academic year 2023 - 2024)

&

B.Tech (Lateral Entry Scheme)
(for the batches admitted from the academic year 2024 - 2025)

These rules and regulations may be altered / changed from time to time by the academic council

FAILURE TO READ AND UNDERSTAND THE RULES IS NOT AN EXCUSE

VISION

To bring forth professionally competent and socially sensible engineers, capable of working across cultures meeting the global standards ethically.

MISSION

To provide students with an extensive and exceptional education that prepares them to excel in their profession, guided by dynamic intellectual community and be able to face the technically complex world with creative leadership qualities.

Further, be instrumental in emanating new knowledge through innovative research that emboldens entrepreneurship and economic development for the benefit of wide spread community.

QUALITY POLICY

Our policy is to nurture and build diligent and dedicated community of engineers providing a professional and unprejudiced environment, thus justifying the purpose of teaching and satisfying the stake holders.

A team of well qualified and experienced professionals ensure quality education with its practical application in all areas of the Institute.

PROGRAM OUTCOMES (PO's)

Engineering Graduates will be able to:

PO1: **Engineering Knowledge:** Apply the knowledge of mathematics, science, engineering fundamentals, and an engineering specialization to the solution of complex engineering problems.

PO2: **Problem Analysis:** Identify, formulate, review research literature, and analyze complex engineering problems reaching substantiated conclusions using first principles of mathematics, natural sciences, and engineering sciences.

PO3: **Design/Development of Solutions:** Design solutions for complex engineering problems and design system components or processes that meet the specified needs with appropriate consideration for the public health and safety, and the cultural, societal, and environmental considerations.

PO4: **Conduct Investigations of Complex Problems:** Use research-based knowledge and research methods including design of experiments, analysis and interpretation of data, and synthesis of the information to provide valid conclusions.

PO5: **Modern Tool Usage:** Create, select, and apply appropriate techniques, resources, and modern engineering and IT tools including prediction and modeling to complex engineering activities with an understanding of the limitations.

PO6: **The Engineer and Society:** Apply reasoning informed by the contextual knowledge to assess societal, health, safety, legal and cultural issues and the consequent responsibilities relevant to the professional engineering practice.

PO7: **Environment and Sustainability:** Understand the impact of the professional engineering solutions in societal and environmental contexts, and demonstrate the knowledge of, and need for sustainable development.

PO8: **Ethics:** Apply ethical principles and commit to professional ethics and responsibilities and norms of the engineering practice.

PO9: **Individual and Team Work:** Function effectively as an individual, and as a member or leader in diverse teams, and in multidisciplinary settings.

PO10: **Communication:** Communicate effectively on complex engineering activities with the engineering community and with society at large, such as, being able to comprehend and write effective reports and design documentation, make effective presentations, and give and receive clear instructions.

PO11: **Project Management and Finance:** Demonstrate knowledge and understanding of the engineering and management principles and apply these to one's own work, as a member and leader in a team, to manage projects and in multidisciplinary environments.

PO12: **Life-Long Learning:** Recognize the need for, and have the preparation and ability to engage in independent and life-long learning in the broadest context of technological change.

CONTENTS

Section	Particulars	Page
1	Choice Based Credit System	1
2	Medium of Instruction	1
3	Programs Offered	1
4	Semester Structure	2
5	Registration / Dropping / Withdrawal	3
6	Credit System	3
7	Curricular Components	4
8	Evaluation Methodology	5
9	Attendance Requirements and Detention Policy	12
10	Conduct of Semester End Examinations and Evaluation	13
11	Scheme for the Award of Grade	13
12	Letter Grades and Grade Points	13
13	Computation of SGPA and CGPA	14
14	Illustration of Computation of SGPA and CGPA	15
15	Review of SEE Theory Answer Books	16
16	Promotion Policies	16
17	Graduation Requirements	17
18	Award of Degree	17
19	B.Tech with Honours or Minor in Engineering	18
20	Temporary Break of Study from the Program	21
21	Termination from the Program	21
22	With-holding of Results	22
23	Graduation Day	22
24	Discipline	22
25	Grievance Redressal Committee	22
26	Transitory Regulations	22
27	Revision of Regulations and Curriculum	23
28	Frequently asked Questions and Answers about autonomy	24
29	Malpractice Rules	28
30	Course Catalogue	31
31	Undertaking by Student / Parent	287

"Take up one idea.
Make that one idea your life-think of it, dream of it, live on that idea.
Let the brain muscles, nerves, every part of your body be full of that idea and just leave every other idea alone. This is the way to success"

Swami Vivekananda

PRELIMINARY DEFINITIONS AND NOMENCLATURES

AICTE: Means All India Council for Technical Education, New Delhi.

Autonomous Institute: Means an institute designated as Autonomous by University Grants Commission (UGC), New Delhi in concurrence with affiliating University (Jawaharlal Nehru Technological University, Hyderabad) and State Government.

Academic Autonomy: Means freedom to an institute in all aspects of conducting its academic programs, granted by UGC for Promoting Excellence.

Academic Council: The Academic Council is the highest academic body of the institute and is responsible for the maintenance of standards of instruction, education and examination within the institute. Academic Council is an authority as per UGC regulations and it has the right to take decisions on all academic matters including academic research.

Academic Year: It is the period necessary to complete an actual course of study within a year. It comprises two main semesters i.e., (one odd + one even) and one supplementary semester.

Branch: Means specialization in a program like B.Tech degree program in Aeronautical Engineering, B.Tech degree program in Computer Science and Engineering etc.

Board of Studies (BOS): BOS is an authority as defined in UGC regulations, constituted by Head of the Organization for each of the departments separately. They are responsible for curriculum design and updation in respect of all the programs offered by a department.

Backlog Course: A course is considered to be a backlog course, if the student has obtained a failure grade (F) in that course.

Basic Sciences: The courses offered in the areas of Mathematics, Physics, Chemistry etc., are considered to be foundational in nature.

Betterment: Betterment is a way that contributes towards improvement of the students' grade in any course(s). It can be done by either (a) re-appearing or (b) re-registering for the course.

Commission: Means University Grants Commission (UGC), New Delhi.

Choice Based Credit System: The credit based semester system is one which provides flexibility in designing curriculum and assigning credits based on the course content and hours of teaching along with provision of choice for the student in the course selection.

Certificate Course: It is a course that makes a student to have hands-on expertise and skills required for holistic development in a specific area/field.

Compulsory course: Course required to be undertaken for the award of the degree as per the program.

Continuous Internal Examination: It is an examination conducted towards sessional assessment.

Core: The courses that are essential constituents of each engineering discipline are categorized as professional core courses for that discipline.

Course: A course is offered by a department for learning in a particular semester.

Course Outcomes: The essential skills that need to be acquired by every student through a course.

Credit: A credit is a unit that gives weight to the value, level or time requirements of an academic course. The number of 'Contact Hours' in a week of a particular course determines its credit value. One credit is equivalent to one lecture/tutorial hour per week.

Credit point: It is the product of grade point and number of credits for a course.

Cumulative Grade Point Average (CGPA): It is a measure of cumulative performance of a student over all the completed semesters. The CGPA is the ratio of total credit points secured by a student in various courses in all semesters and the sum of the total credits of all courses in all the semesters. It is expressed up to two decimal places.

Curriculum: Curriculum incorporates the planned interaction of students with instructional content, materials, resources, and processes for evaluating the attainment of Program Educational Objectives.

Department: An academic entity that conducts relevant curricular and co-curricular activities, involving both teaching and non-teaching staff, and other resources in the process of study for a degree.

Detention in a Course: Student who does not obtain minimum prescribed attendance in a course shall be detained in that particular course.

Dropping from Semester: Student who doesn't want to register for any semester can apply in writing in prescribed format before the commencement of that semester.

Elective Course: A course that can be chosen from a set of courses. An elective can be Professional Elective and / or Open Elective.

Evaluation: Evaluation is the process of judging the academic performance of the student in her/his courses. It is done through a combination of continuous internal assessment and semester end examinations.

Experiential Engineering Education (ExEEd): Engineering entrepreneurship requires strong technical skills in engineering design and computation with key business skills from marketing to business model generation. Our students require sufficient skills to innovate in existing companies or create their own.

Grade: It is an index of the performance of the students in a said course. Grades are indicated by alphabets.

Grade Point: It is a numerical weight allotted to each letter grade on a 10 - point scale.

Honours: An Honours degree typically refers to a higher level of academic achievement at an undergraduate level.

Institute: Means Institute of Aeronautical Engineering, Hyderabad unless indicated otherwise by the context.

Massive Open Online Courses (MOOC): MOOC courses inculcate the habit of self learning. MOOC courses would be additional choices in all the elective group courses.

Minor: Minor are coherent sequences of courses which may be taken in addition to the courses required for the B.Tech degree.

Pre-requisite: A specific course, the knowledge of which is required to complete before student register another course at the next grade level.

Professional Elective: It indicates a course that is discipline centric. An appropriate choice of minimum number of such electives as specified in the program will lead to a degree with specialization.

Program: Means, UG degree program: Bachelor of Technology (B.Tech); PG degree program: Master of Technology (M.Tech) / Master of Business Administration (MBA).

Program Educational Objectives: The broad career, professional and personal goals that every student will achieve through a strategic and sequential action plan.

Project work: It is a design or research-based work to be taken up by a student during his/her final year to achieve a particular aim. It is a credit based course and is to be planned carefully by the student.

Re-Appearing: A student can reappear only in the semester end examination for theory component of a course to the regulations contained herein.

Registration: Process of enrolling into a set of courses in a semester of a program.

Regulations: The regulations, common to all B.Tech programs offered by Institute, are designated as "BT23" and are binding on all the stakeholders.

Semester: It is a period of study consisting of 16 weeks of academic work equivalent to normally minimum of 90 working days. Odd semester commences usually in July and even semester in December of every year.

Semester End Examinations: It is an examination conducted for all courses offered in a semester at the end of the semester.

S/he: Means "she" and "he" both.

Student Outcomes: The essential skill sets that need to be acquired by every student during her/his program of study. These skill sets are in the areas of employability, entrepreneurial, social and behavioral.

University: Means Jawaharlal Nehru Technological University Hyderabad (JNTUH), Hyderabad, is an affiliating University.

Withdraw from a Course: Withdrawing from a course means that a student can drop from a course within the first two weeks of odd or even semester (deadlines are different for summer sessions). However, s/he can choose a substitute course in place of it, by exercising the option within 5 working days from the date of withdrawal.

PREFACE

Dear Students,

The focus at IARE is to deliver value-based education with academically well qualified faculty and infrastructure. It is a matter of pride that IARE continues to be the preferred destination for students to pursue an engineering degree.

In the year 2015, IARE was granted academic autonomy status by University Grants Commission, New Delhi under Jawaharlal Nehru Technology University Hyderabad. From then onwards, our prime focus is on developing and delivering a curriculum which caters to the needs of various stakeholders. The curriculum has unique features enabling students to develop critical thinking, solve problems, analyze socially relevant issues, etc. The academic cycle designed on the basis of Outcome Based Education (OBE) strongly emphasizes continuous improvement and this has made our curriculum responsive to current requirements.

The curriculum at IARE has been developed by experts from academia and industry and it has unique features to enhance problem solving skills apart from academic enrichment. The curriculum of B.Tech program has been thoroughly revised as per AICTE / UGC / JNTUH guidelines and have incorporated unique features such as competency training / coding, industry driven elective, internship and many more. The curriculum is designed in a way so as to impart engineering education in a holistic approach towards Excellence.

I hope you will have a fruitful stay at IARE.

Dr. L V Narasimha Prasad
Principal

INSTITUTE OF AERONAUTICAL ENGINEERING

(Autonomous)

ACADEMIC REGULATIONS – BT23

B.Tech. Regular Four-Year Degree Program
(for the batches admitted from the academic year 2023 - 2024)
&
B.Tech. (Lateral Entry Scheme)
(for the batches admitted from the academic year 2024 - 2025)

For pursuing four year undergraduate Bachelor of Technology (B.Tech) degree program of study in engineering offered by Institute of Aeronautical Engineering under Autonomous status.

A student shall undergo the prescribed courses as given in the program curriculum to obtain his / her degree in major in which he/she is admitted with 160 credits in the entire program of 4 years. Additional 20/18 credits can be acquired for the degree of B.Tech with **Honours or Minor in Engineering**. These additional 20/18 credits will have to be acquired with massive open online courses (MOOCs) / courses offered by the respective department, to tap the zeal and excitement of learning beyond the classrooms. This creates an excellent opportunity for students to acquire the necessary skill set for employability through massive open online courses where the rare expertise of world-famous experts from academics and industry are available.

Separate certificate will be issued in addition to major degree program mentioning that the student has cleared Honours / Minor specialization in respective courses.

1. CHOICE BASED CREDIT SYSTEM

The credit-based semester system provides flexibility in designing program curriculum and assigning credits based on the course content and hours of teaching. The Choice Based Credit System (CBCS) provides a 'cafeteria' type approach in which the students can take courses of their choice, learn at their own pace, undergo additional courses and acquire more than the required credits, and adopt an interdisciplinary approach to learning.

A course defines learning objectives and learning outcomes and comprises lectures / tutorials / laboratory work / field work / project work / seminars / assignments / MOOCs / alternative assessment tools / presentations / self-study etc., or a combination of some of these. Under the CBCS, the requirement for awarding a degree is prescribed in terms of number of credits to be completed by the students.

2. MEDIUM OF INSTRUCTION

The medium of instruction shall be **English** for all courses, examinations, seminar presentations and project work. The program curriculum will comprise courses of study as given in course structure, in accordance with the prescribed syllabi.

3. PROGRAMS OFFERED

Presently, the institute is offering Bachelor of Technology (B.Tech) degree programs in eleven disciplines. The various programs and their two-letter unique codes are given in Table 1.

Table 1: B.Tech Programs offered

S. No	Name of the Program	Title	Code
1	Aeronautical Engineering	AE	07
2	Computer Science and Engineering	CS	05
3	Computer Science and Engineering (AI & ML)	CA	34
4	Computer Science and Engineering (Data Science)	CD	35
5	Computer Science and Engineering (Cyber Security)	CC	36
6	Information Technology	IT	06
7	Electronics and Communication Engineering	EC	04
8	Electrical and Electronics Engineering	EE	02
9	Mechanical Engineering	ME	03
10	Civil Engineering	CE	01

4. SEMESTER STRUCTURE

Each academic year is divided into two semesters, **ODD and EVEN** semester. Both the semesters have regular class work.

4.1 Each semester shall be of 21 weeks (Table 2) duration, and this period includes time for course registration, regular class work, examination preparation, and conduction of examinations.

4.2 Each semester shall have a minimum of 90 Instructional / working days.

4.3 The academic calendar for both Odd and Even semester shown in Table 2 is declared at the beginning of the academic year.

Table 2: Academic Calendar

FIRST SEMESTER (21 weeks)	I Spell Instruction Period	8 weeks	19 weeks
	I Continuous Internal Assessment Examinations (Mid-term)	1 week	
	II Spell Instruction Period	8 weeks	
	II Continuous Internal Assessment Examinations (Mid-term)	1 week	
	Preparation and Practical Examinations	1 week	
	Semester End Examinations		2 weeks
Semester Break and Supplementary Exams			5 weeks
SECOND SEMESTER (21 weeks)	I Spell Instruction Period	8 weeks	19 weeks
	I Continuous Internal Assessment Examinations (Mid-term)	1 week	
	II Spell Instruction Period	8 weeks	
	II Continuous Internal Assessment Examinations (Mid-term)	1 week	
	Preparation and Practical Examinations	1 week	
	Semester End Examinations		2 weeks
Semester Break and Supplementary Exams			5 weeks

4.4 Students admitted on transfer from JNTUH affiliated institutes, Universities and other institutes in the courses in which they are required to earn credits so as to be on par with regular students as prescribed by concerned 'Board of Studies'.

5 REGISTRATION / DROPPING / WITHDRAWAL

The academic calendar includes important academic activities to assist the students and the faculty. These include, dates assigned for registration of courses, dropping of courses and withdrawal from courses. This enables the students to be well prepared and take full advantage of the flexibility provided by the credit system.

5.1. Each student has to compulsorily register for course work at the beginning of each semester as per the schedule mentioned in the Academic Calendar. It is compulsory for the student to register for courses in time. The registration will be organized departmentally under the supervision of the Head of the department.

5.2. In ABSENTIA, registration will not be permitted under any circumstances.

5.3. At the time of registration, students should have cleared all the dues of Institute and Hostel for the previous semesters, paid the prescribed fees for the current semester and not been debarred from the institute for a specified period on disciplinary or any other ground.

5.4. In the first two semesters, the prescribed course load per semester is fixed and is mandated to register all courses. Withdrawal / dropping of courses in the first and second semester is not allowed.

5.5. In all semesters, the average load is 20 credits / semester, with its minimum and maximum limits being set at 16 and 24 credits. This flexibility enables students (**from IV semester onwards**) to cope-up with the course work considering the academic strength and capability of student.

Note: A course may be offered to the students, only if a minimum of 20 students opt for it.

5.6. **Dropping of Courses:**
Within one week after the last date of first continuous internal examination, the student may in consultation with his / her faculty mentor / adviser, drop one or more courses without prejudice to the minimum number of credits as specified in clause 5.5. The dropped courses are not recorded in the memorandum of grades. Student must complete the dropped course(s) by registering in the forthcoming semester in order to earn the required credits.

5.7. **Withdrawal from Courses:**
A student is permitted to withdraw from a course before commencement first continuous internal examination. Such withdrawals will be permitted without prejudice to the minimum number of credits as specified in clause 5.5. A student cannot withdraw a course more than once and withdrawal of reregistered courses is not permitted.

6. CREDIT SYSTEM

The B.Tech Program shall consist of a number of courses and each course shall be assigned with credits. The curriculum shall comprise Program Core Courses (PCC), Program Elective Courses (PEC), Open Elective Courses (OEC), Laboratory Courses, Mandatory Courses (MC), Value Added Courses (VAC), Experiential Engineering Education (ExEEd), Internship and Project work.

Depending on the complexity and volume of the course, the number of contact periods per week will be assigned. Each theory and laboratory course carries credits based on the number of hours / week.

- Contact classes (Theory): 1 credit per lecture hour per week, 1 credit per tutorial hour per week.
- Laboratory hours (Practical): 1 credit for 2 practical hours per week.
- Project work: 1 credit for 2 hours of project work per week.

- Experiential Engineering Education (ExEEd): 1 credit for two per hours.
- Mandatory courses / Value added courses : No credit is awarded.

Credit distribution for courses offered is given in Table 3.

Table 3: Credit distribution

S. No	Course	Hours	Credits
1	Theory courses	2 / 3 / 4	2 / 3 / 4
2	Program elective courses / Open elective courses	3 / 2	3 / 2
3	Laboratory courses	2 / 3 / 4	1 / 1.5 / 2
4	Mandatory course / Value added course	-	0
5	Project Work: Phase - I and II	-	14
6	Full Semester Internship (FSI) Project work	-	14

Major benefits of adopting the credit system are listed below:

- Quantification and uniformity in the listing of courses for all programs at institute, like core, electives and project work.
- Ease of allocation of courses under different heads by using their credits to meet national /international practices in technical education.
- Convenience to specify the minimum / maximum limits of course load and its average per semester in the form of credits to be earned by a student.
- Flexibility in program duration for students by enabling them to pace their course load within minimum/maximum limits based on their preparation and capabilities.
- Wider choice of courses available from any department of the same institute or even from other similar institute, either for credit or for audit.
- Improved facility for students to optimize their learning by availing of transfer of credits earned by them from one College to another.

7. CURRICULAR COMPONENTS

Courses in a curriculum may be of three kinds: **Foundation / Skill, Program core courses, Program elective courses and Open elective courses.**

Foundation / Skill Course:

Foundation courses are the courses based upon the content leads to enhancement of skill and knowledge as well as value based and are aimed at man making education. Skill courses are those areas in which one needs to develop a set of skills to learn anything at all. They are fundamental to learning any course.

Program core courses (PCC):

There may be a program core course in every semester. This is the course which is to be compulsorily studied by a student as a core requirement to complete the requirement of a program in the said discipline of study.

Program elective courses (PEC) / Open elective courses (OEC):

Electives provide breadth of experience in respective branch and application areas. The program elective course(s) is a course which can be chosen from a pool of courses. It may be:

- Supportive to the discipline of study
- Providing an expanded scope
- Enabling an exposure to some other discipline / domain
- Nurturing student's proficiency / skill.

An elective may be program elective, is a discipline centric focusing on those courses which add generic proficiency to the students or may be Open elective course, chosen from unrelated disciplines.

There is list of professional elective courses; students can choose not more than two courses from each track. Overall, students can opt for six professional elective courses which suit their project work in consultation with the faculty advisor / mentor. Nevertheless, one course from each of the three open electives has to be selected. A student may also opt for more elective courses in his/her area of interest.

Every course of the B.Tech program will be placed in one of the eight categories with minimum credits as listed in the Table 4.

Table 4: Category Wise Distribution of Credits

S. No	Category	Breakup of Credits
1	Humanities and Social Sciences (HSMC), including Management.	07
2	Basic Science Courses (BSC) including Mathematics, Physics and Chemistry.	28
3	Engineering Science Courses (ESC), including Workshop, Drawing, ExEEd, Basics of Electrical / Electronics / Mechanical / Computer Engineering.	09
4	Program Core Courses (PCC), relevant to the chosen specialization / branch.	75
5	Program Elective Courses (PEC), relevant to the chosen specialization / branch.	18
6	Open Elective Courses (OEC), from other technical and / or emerging course areas.	09
7	Project work (PROJ) / Full Semester Internship (FSI) Project work	14
8	Mandatory Courses (MC) / Value Added Courses (VAC)	Non-Credit
TOTAL		**160**

Semester wise course break-up

Following are the **TWO** models of course structure out of which any student shall choose or will be allotted with one model based on their academic performance.

i. Full Semester Internship (FSI) Model and
ii. Non Full Semester Internship (NFSI) Model

A student who secures a minimum CGPA of 7.5 upto IV semester with **no current arrears** and maintains the CGPA of 7.5 till VI semester shall be eligible to opt for FSI. Students can opt full semester internship (FSI) either in VII or VIII semesters. In Non-FSI Model, all the selected students shall carry out the course work and project work as specified in the course cataloge.

8. EVALUATION METHODOLOGY

Total marks for each course shall be based on Continuous Internal Assessment (CIA) and Semester End Examinations (SEE). There shall have a uniform pattern of 40:60 for CIA and SEE of both theory and practical courses. The institute shall conduct multiple continuous internal assessments (CIA) for theory courses. All the performances of a student shall be considered for Continuous Internal Assessment (CIA) marks.

Table 5: Outline for Continuous Internal Assessments (CIA-1 and CIA-2) and SEE:

Activities	CIA-1	CIA-2	SEE	Total Marks
Continuous Internal Examination (CIE)	10 marks	10 marks		20 marks
Definitions and Terminology / Quiz	5 marks	5 marks		10 marks
Tech Talk / Assignment	5 marks	5 marks		10 marks
Semester End Examination (SEE)			60 marks	60 marks
Total	--	--	100 marks	

8.1 Continuous Internal Assessments (CIA-1 and CIA-2)

Assessment is an ongoing process that begins with establishing clear and measurable expected outcomes of student learning, provides students with sufficient opportunities to achieve those outcomes, and concludes with gathering and interpreting evidence to determine how well students' learning matches expectations.

The first component (CIA-1) of assessment is for 10 marks, definitions and terminology / quiz carry 05 marks and 05 marks allotted for Tech talk / Assignments. This assessment and score process should be completed after completing of first 50% of syllabus ($2^{1/2}$) of the course/s and within 45 working days of semester program.

The second component (CIA-2) of assessment is for 10 marks, definitions and terminology / quiz carry 05 marks and 05 marks are allotted for Tech talk / Assignments. This assessment and score process should be completed after completing of remaining 50% of syllabus ($2^{1/2}$) of the course/s and within 45 working days of semester program.

In case of a student who has failed to attend the CIA1 or CIA2 on a scheduled date, shall be deemed that the student has dropped the examination. However, in case a student could not take the test on scheduled date due to genuine reasons, may appeal to the HOD / Principal. The HOD / Principal in consultation with the class in-charge shall decide about the genuineness of the case and decide to conduct Make-Up Examination to such candidate on the date fixed by the Examinations Control Office but before commencement of the concerned semester end examinations.

8.2 Definitions and Terminology / Quiz

Definitions and Terminology: The conduction of definitions and terminology is completely online. The faculty should prepare 30 to 35 questions from each and every module by clearly mentioning the answer. The course handling faculty needs to submit detailed document to the respective department.

Mode of conducting examination: Online through e-Examdesk

Quiz: The faculty should prepare 50 multiple choice questions from each module (50 * 5 = 250 questions). Each question will have four choices / options, fill in the blanks etc. The course handling faculty needs to submit detailed document to the respective department.

Mode of conducting examination: Online through e-Examdesk

8.3 Tech Talk / Assignment

Tech Talk: Technical talks cover a wide range of technical concepts and ideas. For conduction of Tech Talk faculty has to submit latest topics from IEEE, CSI, magazines etc.

Assignments: The assignments develop different skills and increase their knowledge base significantly. It provides the evidence for the faculty that the students have achieved the goals. It helps the faculty to evaluate the student's understanding of the course. The output can be judged using sensory perception (observing, reading, tasting etc.). Faculty should prepare 30 to 35 assignment questions from each module and submit the same to respective department.

8.4 Semester End Examination (SEE)

The semester end examinations (SEE), for theory courses, will be conducted for 60 marks. The syllabus for the theory courses is divided into FIVE modules and each module carries equal weightage in terms of marks distribution. The question paper has eight questions; module one and two has one question each, and two questions each from modules three, four and five. There will be no choice for first and second modules. From third module onwards there will be an "either" "or" choice, and the student should answer either of the two questions. Each question carries 12 marks and has two parts (A and B). Part A is a descriptive type question for 6 marks and Part B a critical thinking question / problem solving question for 6 marks. **The duration of semester end examination is 3 hours.**

8.5 Passing Criteria:

To maintain high standards in all aspects of examinations at the institute, the institute shall follow the standards of passing at CIA (CIA-1 and CIA-2) and SEE for each course. However, the student's performance in a course shall be judged by taking into account the results of CIE and SEE individually and also together, as shown below:

a) A minimum of 35% of marks to be secured by cumulating marks in CIA-1 and CIA-2 for appearing for a SEE theory examination.

b) A minimum of 35% of marks to be scored in SEE for passing a theory course.

c) A minimum of 40% of marks in CIA+ SEE for passing a theory course.

8.5 Supplementary examinations

Supplementary examinations for the odd semester shall be conducted with the regular examinations of even semester and vice versa. In case of failure in any course, a student may be permitted to register for the same course when offered.

Advanced supplementary examination will be conducted for VIII semester courses at the end of the program after declaration of results.

8.6 Laboratory Course

Evaluation methodology of laboratory course (CIA)

Each laboratory courses there shall be a CIA during the semester for 40 marks and 60 marks for SEE. The 40 marks for internal evaluation marks are awarded as follows:

1. A write-up on day-to-day experiment in the laboratory (in terms of aim, components / procedure, expected outcome) which shall be evaluated for **10 marks.**
2. **10 marks** for viva-voce (or) tutorial (or) case study (or) application (or) poster presentation of the course concerned.
3. Internal practical examination conducted by the laboratory teacher concerned shall be evaluated for **10 marks.**
4. The remaining **10 marks** are for Laboratory Report/Project and Presentation, which consists of the Design (or) Software / Hardware Model Presentation (or) App Development (or) Prototype Presentation which shall be evaluated after completion of laboratory course and before semester end practical examination.

Evaluation methodology of laboratory course (SEE)

The Semester End Examination shall be conducted by an external examiner and the laboratory handling faculty. The external examiner shall be appointed from the other colleges which will be decided by the Principal.

The Semester End Examination held for 3 hours. Total 60 marks are divided and allocated as shown below:

1. 10 marks for write-up
2. 15 for experiment / program
3. 15 for evaluation of results
4. 10 marks for presentation on another experiment/program in the same laboratory course and
5. 10 marks for viva-voce on concerned laboratory course.

8.7 Mandatory Courses (MC)

These courses are among the compulsory courses will not carry any credits. However, a pass in each such course during the program shall be necessary requirement for the student to qualify for the award of degree. No marks or letter grades shall be allotted for mandatory/non-credit courses. Its result shall be declared as **"Satisfactory" or "Not Satisfactory"** performance.

8.8 Additional Mandatory Courses for lateral entry B.Tech students

In addition to the non-credit mandatory courses for regular B.Tech students, the lateral entry students shall take up the following three non-credit mandatory bridge courses (one in III semester, one in IV semester and one in V semester) as listed in Table 6. The student shall pass the following non-credit mandatory courses for the award of the degree and must clear these bridge courses before advancing to the VII semester of the program.

Table-6: Additional Mandatory Courses for lateral entry students

S. No	Additional mandatory courses for lateral entry students
1	Dip-Mathematics
2	Dip-English Communication Skills
3	Dip-Programming for Problem Solving / Essentials of Problem Solving

8.9 Value Added Courses (VAC)

1. Introduction

Value-Added courses are not part of the curriculum and designed to provide necessary skills to increase the employability quotient and equip the students with essential skills to succeed in life.

Institute offers a wide variety of value-added Courses which shall be conducted after class hours. These courses shall be conducted by experts or in-house staff and help students stand apart from the rest in the job market by adding further value to their resume. These value-added courses will be mostly independent to each type of the fields.

2. Objectives

Objectives of the value-added course are:

- Provide students an understanding of the expectations of industry.
- Improve employability skills of students.
- Bridge the skill gaps and make students industry ready.
- Provide an opportunity to students develop their inter-disciplinary skills.
- Mould students as job providers rather than job seekers.

3. Designing the Courses

- Before designing the syllabus, the feedback from the employers, alumni and industry people will be analyzed and considered to select and design an appropriate course by identifying the gaps and also understand the expectations for current and emerging trends.

- Any new value-added course developed by a department should be placed before the Board of Studies for approval.
- The course offered should not be the same as any course listed in the curriculum of the respective Program / or any other program offered in the institute.
- A unique course code is to be given for each course.

4. Guidelines for conducting value added courses

- Value Added Course is not mandatory to qualify for any program.
- It is a teacher assisted learning course open to all students without any additional fee.
- Classes for VAC will be conducted beyond the regular class work only.
- A student will be permitted to register only one value added course in a semester.

5. Duration and Venue

- The duration of value-added course should not be less than 30 hours.
- The respective Head of the department shall provide class room/s based on the number of students/batches.

6. Procedure for Registration:

The list of value-added courses shall be displayed in the institute website along with the syllabus, objectives and outcomes. A student shall register for a value-added course offered during the semester by submitting the duly filled in registration form. The Head of the department shall segregate the list of students enrolled for the value-added course and submit the details to Dean of academics before the start of course.

7. Attendance

Value added course handling faculty shall be responsible for the maintenance of attendance and assessment who have registered for the course.

- The record shall contain details of the students' attendance, number of classes attended and also Record shall also contain the organisation of lesson plan of the Course Instructor.
- The record shall be submitted to the Head of the department for monitoring the attendance.
- At the end of the semester, the record shall be duly signed by the course coordinator and the Head of the Department and placed in safe custody for any future verification.
- Each student shall have a minimum of 75% attendance in all the courses of the particular semester failing which he or she will not be permitted to write the semester end examination.

8. Passing Requirement and Grading

- The passing requirement for value added courses shall be 40% of the marks prescribed for the course.
- A candidate who has not secured a minimum of 40% of marks in a course (internal and end-term) shall reappear for the course in the next semester/year.
- The grades obtained in value-added courses will not be included for calculating the CGPA.

9. Course Completion

- Students will get a certificate after they have registered for, written the exam and successfully passed.
- The students who have successfully completed the value-added Course shall be issued with a Certificate duly signed by the Authorized signatories.

Note: Apart from the above, students can also register and get the value-added course completion certificate by registering the courses from SWAYAM, e-PG patashala (NPTEL).

8.10 Experiential Engineering Education (ExEED)

Engineering entrepreneurship requires strong technical skills in engineering design and computation with key business skills from marketing to business model generation. Students require sufficient skills to innovate in existing companies or create their own.

This course will be evaluated for a total of 100 marks consisting of 40 marks for internal assessment and 60 marks for semester end Examination. Out of 40 marks of internal assessment, students has to submit Innovative Idea in a team of four members in the given format. The semester end examination for 60 marks shall be conducted internally, students has to present the Innovative Idea and it will be evaluated by internal ExEEd faculty with at least one faculty member as examiner from the industry, both nominated by the Principal from the panel of experts recommended by the Dean-CLET.

Center for Outcome Based Teaching and Learning (OBTL) of the institute design and teach ExL power skills courses, to shape the student's future. All the below mentioned Experiential Engineering Education (ExEED) courses are evaluated for one credit each.

- **ExL – Essential of Innovation:** This course creates platform where students experience a hands-on approach to learning about engineering. It focuses on educating the students about diversified platforms for learning the skills, career development, innovations, entrepreneurship etc. Based on the requirements this course is offered in first or second semester.
- **ExL – Prototype / Model Development**: It covers the application of relevant technologies to create interaction prototypes. Students learn about different kinds of prototyping activities involved in designing low-fidelity and high-fidelity prototypes such as POC models, web pages and mobile interfaces etc. This course introduces key concepts, processes and principles of industry driven digital fabrication in a manufacturing environment. Students will undertake small-scale, team-based project work to create fabricated objects that relate to a local industry, organisation or community need or opportunity.

8.11 Project Work / FSI Project Work

This gives students a platform to experience a research driven career in engineering, while developing a device / systems and publishing in reputed SCI / SCOPUS indexed journals and/or filing an **Intellectual Property** (IPR-Patent/Copyright) to aid communities around the world. Students should work individually as per the guidelines issued by head of the department concerned. The benefits to students of this mode of learning include increased engagement, fostering of critical thinking and greater independence.

The topic should be so selected that the students are enabled to complete the work in the stipulated time with the available resources in the respective laboratories. The scope of the work be handling part of the consultancy work, maintenance of the existing equipment, development of new experiment setup or can be a prelude to the main project with a specific outcome.

Project report will be evaluated for 100 marks in total. Assessment will be done for 100 marks out of which, the supervisor / guide will evaluate for 40 marks based on the work and presentation / execution of the work. Subdivision for the remaining 60 marks is based on publication, report, presentation, execution and viva-voce. Evaluation shall be done by a committee comprising the supervisor, Head of the department, and an examiner nominated by the Principal.

8.12 Skill enhancement project

Students must submit the skill enhancement project report of the specified course which are included in the course catalogue. If the student has failed to submit the report or not reached upto the mark, needs to re-register the course in next semesters till completion.

8.13 Project work

The student's project activity is spread over in VII semester and in VIII semesters. A student shall carry out the project work under the supervision of a faculty member or in collaboration with an Industry, R&D organization or another academic institution / University where sufficient facilities exist to carry out the project work.

Project work (Phase - I) starts in VII semester as it takes a vital role in campus hiring process. Students shall select project titles from their respective logins uploaded by the supervisors at the middle of the VI semester. Two reviews are conducted by department review committee (DRC). Student must submit a project report summarizing the work done up to design phase/prototype by the end of VII semester. The semester end examination for project work (Phase-I) is evaluated based on the project report submitted and a viva-voce exam for 60 marks by a committee comprising the head of the department, the project supervisor and an external examiner nominated by the Principal.

Project Work (Phase - II) starts in VIII semester, and it shall be evaluated for 100 marks out of which 40 marks towards continuous internal assessment and 60 marks for semester end examination. Two reviews are to be conducted by DRC on the progress of the project for 40 marks. The semester end examination shall be based on the final report submitted and a viva-voce exam for 60 marks by a committee comprising the head of the department, the project supervisor and an external examiner nominated by the Principal.

A minimum of 50% of maximum marks shall be obtained to earn the corresponding credits.

8.14 Full Semester Internship (FSI)

FSI is a full semester internship program carry 14 credits. The FSI shall be opted in VII semester or in VIII semester. During the FSI, student has to spend one full semester in an identified industry / firm / R&D organization or another academic institution/University where sufficient facilities exist to carry out the project work.

Following are the evaluation guidelines:

- Quizzes: 2 times
- Quiz #1 - About the industry profile, weightage: 5%
- Quiz #2 - Technical-project related, weightage: 5%
- Seminars - 2 times (once in six weeks), weightage: 7.5% + 7.5%
- Viva-voce: 2 times (once in six weeks), weightage: 7.5% + 7.5%
- Project Report, weightage: 15%
- Internship Diary, weightage: 5 %
- Final Presentation, weightage: 40%

FSI shall be open to all the branches with a ceiling of maximum 10% distributed in both semesters. The selection procedure is:

- Choice of the students.
- CGPA (> 7.5) upto IV semester having no credit arrears.
- Competency Mapping / Allotment.

It is recommended that the FSI Project work leads to a research publication in a reputed Journal / Conference or the filing of patent / design with the patent office, or, the start-up initiative with a sustainable and viable business model accepted by the incubation center of the institute together with the formal registration of the startup.

8.15 Field projects / Internship Academic attachment:

The Field Projects (FP) / Internships are mandatory for the students admitted from the academic year 2023 -24 onwards. It is spreaded over from II semester to VI semester.

Field Project: Field project (FP) integrates theory and practice by providing students with an opportunity to work on real-world challenges. It can be used to learn about the functioning and manufacturing procedures of a factory. Besides this, student can also learn about the geographical factors of the region for the specific products /equipment.

Internship is an integral part of the academic curriculum, it is a learning activity in which a student fortifies and deepens his/her theoretical knowledge and skills attained in the classrooms by integrating with practical activities. It offers the students an opportunity to gain hands-on industrial or organizational exposure; to integrate the knowledge and skills acquired through the coursework; interact with professionals and other interns; and to improve their presentation, writing, and communication skills. Internship often acts as a gateway for final placement for many students.

Table 7: Possibility of availing opportunities during semester breaks.

S.No	Schedule	Duration	Type
1	At the end of II semester / Before commencement of III semester	2 Weeks	Field Project
2	At the end of IV semester / Before commencement of V semester	2 Weeks	Internship
3	At the end of VI semester / Before commencement of VII semester	2 Weeks	Internship

Evaluation Methodology of Field Project / Internships:

The evaluation of the field project / field practicum / Internships will be done before commencement of subsequent semester specified in Table: 7. The students have to submit a detailed report of field project / field practicum / Internships through online portal and also carry hard copy of report with geo-tagged photographs. The committee will evaluate by enclosing their comments like **satisfactory or not satisfactory**. If students get not satisfactory results, reports need to be re-submit in the respective department once again for evaluation.

8.16 Plagiarism index for Project report:

All project reports shall go through the plagiarism check and the plagiarism index has to be less than 20%. Project reports with plagiarism more than 20% and less than 60% shall be asked for resubmission within a stipulated period of six months. Project reports with plagiarism more than 60% shall be rejected.

9. ATTENDANCE REQUIREMENTS AND DETENTION POLICY

9.1 A student shall be eligible to appear for the semester end examinations, if the student acquires a minimum of 75% of attendance in aggregate of all the courses (including attendance in mandatory courses like Environmental Science, Constitution of India, and Gender Sensitization etc..) for that semester. **Two periods** of attendance for each theory course shall be considered, if the student appears for the mid-term examination of that course.

9.2 Shortage of attendance in aggregate upto 10% (65% and above, and below 75%) in each semester may be condoned by the college academic committee on genuine and valid grounds, based on the student's representation with supporting evidence.

9.3 A stipulated fee shall be payable for condoning of shortage of attendance.

9.4 Shortage of attendance below 65% in aggregate shall in NO case be condoned.

9.5 Students whose shortage of attendance is not condoned in any semester are not eligible to take their semester end examinations of that semester. They get detained and their registration for that semester shall stand cancelled, including all academic credentials (internal marks etc.) of that semester. They will not be promoted to the next semester. They may seek re-registration for all those courses registered in that semester in which the student is detained, by seeking re-admission into that semester as and when offered; if there are any program electives and / or open electives, the same may also be re- registered if offered. However, if those electives are not offered in later semesters, then alternate electives may be chosen from the **same** set of elective courses offered under that category.

9.6 A student fulfilling the attendance requirement in the present semester shall not be eligible for readmission into the same class.

9.7 A student detained in a semester due to shortage of attendance may be re-admitted in the same semester in the next academic year for fulfillment of academic requirements. The academic regulations under which a student has been re-admitted shall be applicable. Further, no grade

allotments or SGPA/ CGPA calculations will be done for the entire semester in which the student has been detained.

9.8 A student detained due to lack of credits, shall be promoted to the next academic year only after acquiring the required number of academic credits. The academic regulations under which the student has been readmitted shall be applicable to him.

10. CONDUCT OF SEMESTER END EXAMINATIONS AND EVALUATION

10.1 Semester end examination shall be conducted by the Controller of Examinations (COE) by inviting question papers from the external examiners.

10.2 COE shall invite 3 - 9 internal / external examiners to evaluate all the semester end examination answer books on a prescribed date(s). Practical laboratory examinations are conducted involving external examiners.

10.3 Examinations control office shall consolidate the marks awarded by examiner/s and award the grades.

11. SCHEME FOR THE AWARD OF GRADE

11.1 A student shall be deemed to have satisfied the minimum academic requirements and earn the credits for each theory course, if s/he secures,

a) Not less than 35% marks for each theory course in the semester end examination, and
b) A minimum of 40% marks for each theory course considering Continuous Internal Assessment (CIA) and Semester End Examination (SEE).

11.2 A student shall be deemed to have satisfied the minimum academic requirements and earn the credits for each Laboratory / Project work / FSI Project work, if s/he secures,

a) Not less than 40% marks for each Laboratory / Project work / FSI project work course in the semester end examination,
b) A minimum of 40% marks for each Laboratory / Project work / FSI project work course considering both internal and semester end examination.

11.3 If a candidate fails to secure a pass in a particular course, it is mandatory that s/he shall register and reappear for the examination in that course during the next semester when examination is conducted in that course. It is mandatory that s/he should continue to register and reappear for the examination till s/he secures a pass.

11.4 A student shall be declared successful or 'passed' in a semester, if he secures a Grade Point ≥ 5 ('C' grade or above) in every course in that semester (i.e. when the student gets an SGPA ≥5.0 at the end of that particular semester); and he shall be declared successful or 'passed' in the entire under graduate programme, only when gets a CGPA ≥5.0 for the award of the degree as required.

12. LETTER GRADES AND GRADE POINTS

12.1 Performances of students in each course are expressed in terms of marks as well as in Letter Grades based on absolute grading system. The UGC recommends a 10-point grading system with the following letter grades as given in the Table 8.

Table-8: Grade Points Scale (Absolute Grading)

% of Marks Secured in a Course (Class Intervals)	Letter Grade	Grade Point
Greater than or equal to 90%	O (Outstanding)	10
80 and less than 90%	A+ (Excellent)	9
70 and less than 80%	A (Very Good)	8
60 and less than 70%	B+ (Good)	7

50 and less than 60%	B (Average)	6
40 and less than 50%	C (Pass)	5
Below 40%	F (Fail)	0
Absent	AB (Absent)	0

12.2 A student is deemed to have passed and acquired to correspondent credits in particular course if s/he obtains any one of the following grades: "O", "A+", "A", "B+", "B", "C".

12.3 A student obtaining Grade F shall be considered Failed and will be required to reappear in the examination.

12.4 For non credit courses, 'PP' or "NP" is indicated instead of the letter grade and this will not be counted for the computation of SGPA / CGPA.

12.5 At the end of each semester, the institute issues grade sheet indicating the SGPA and CGPA of the student. However, grade sheet will not be issued to the student if s/he has any outstanding dues.

Table 09: Percentage Equivalence of Grade Points (for a 10 – Point Scale)

Grade Point	Percentage of Marks / Class
5.5	50
6.0	55
6.5	60
7.0	65
7.5	70
8.0	75

Note:

(1) The following Formula for Conversion of CGPA to percentage of marks to be used only after a student has successfully completed the program:

Percentage of Marks = $(CGPA - 0.5) \times 10$

(2) Class designation:

≥75% (First Class with Distinction),

≥ 60% and <75 % (First Class),

<60 % and ≥50% (Second Class),

≥40% and <50% (Pass Class).

(3) The SGPA will be computed and printed on the Memorandum of Grades only if the candidate passes in all the courses offered and gets minimum C grade in all the courses.

(4) CGPA is calculated only when the candidate passes in all the courses offered in all the semesters.

13. COMPUTATION OF SGPA AND CGPA

The UGC recommends to compute the Semester Grade Point Average (SGPA) and Cumulative Grade Point Average (CGPA). The credit points earned by a student are used for calculating the Semester Grade Point Average (SGPA) and the Cumulative Grade Point Average (CGPA), both of which are important performance indices of the student. SGPA is equal to the sum of all the total points earned by the student in a given semester divided by the number of credits registered by the student in that semester. CGPA gives the sum of all the total points earned in all the previous semesters and the current semester divided by the number of credits registered in all these semesters. Thus,

$$SGPA = \sum_{i=1}^{n} (C_i G_i) / \sum_{i=1}^{n} C_i$$

Where, C_i is the number of credits of the ith course and G_i is the grade point scored by the student in the ith course and n represent the number of courses in which a student is registered in the concerned semester.

$$CGPA = \sum_{j=1}^{m} (C_j S_j) / \sum_{j=1}^{m} C_j$$

Where, S_j is the SGPA of the jth semester and C_j is the total number of credits upto the semester and m represent the number of semesters completed in which a student registered upto the semester.

The SGPA and CGPA shall be rounded off to 2 decimal points and reported in the transcripts.

14.0 ILLUSTRATION OF COMPUTATION OF SGPA AND CGPA

14.1 Illustration for SGPA

Course Name	Course Credits	Grade letter	Grade point	Credit Point (Credit x Grade)
Course 1	4	A	8	4 x 8 = 32
Course 2	4	O	10	4 x 10 = 40
Course 3	4	C	5	4 x 5 = 20
Course 4	3	B	6	3 x 6 = 18
Course 5	3	A+	9	3 x 9 = 27
Course 6	3	C	5	3 x 5 = 15
	21			**152**

Thus, SGPA = 152 / 21= 7.24

14.2 Illustration for calculation of CGPA upto 3rd semester

Semester	Course Title	Credits Allotted	Letter Grade Secured	Corresponding Grade Point (GP)	Credit Points (CP)
I	Course 1	3	A	8	24
I	Course 2	3	O	10	30
I	Course 3	3	B	6	18
I	Course 4	4	A	8	32
I	Course 5	3	A+	9	27
I	Course 6	4	C	5	20
II	Course 7	4	B	6	24
II	Course 8	4	A	8	32
II	Course 9	3	C	5	15
II	Course 10	3	O	10	30
II	Course 11	3	B+	7	21
II	Course 12	4	B	6	24
II	Course 13	4	A	8	32
II	Course 14	3	O	10	30
III	Course 15	2	A	8	16
III	Course 16	1	C	5	5
III	Course 17	4	O	10	40

III	Course 18	3	B+	7	21
III	Course 19	4	B	6	24
III	Course 20	4	A	8	32
III	Course 21	3	B+	7	21
	Total Credits	**69**		**Total Credits**	**518**

Thus, CGPA = 518 / 69= 7.51

- The calculation process of CGPA illustrated above will be followed for each subsequent semester until 8th semester. The CGPA obtained at the end of 8th semester will become the final CGPA secured for entire B.Tech. program.
- For merit ranking or comparison purposes or any other listing, only the rounded off' values of the CGPAs will be used.
- SGPA and CGPA of a semester will be mentioned in the semester Memorandum of Grades if all courses of that semester are passed in first attempt, otherwise the SGPA and CGPA shall be mentioned only on the Memorandum of Grades in which sitting s/he passed his last exam in that semester. However, mandatory courses will not be taken into consideration.

15. REVIEW OF SEE THEORY ANSWER BOOKS

If the examinee is not satisfied with the marks awarded, s/he may apply for revaluation of answer book in prescribed format online within three (3) working days from the date of declaration of result of the examination or issue of the statement of marks, whichever is earlier. The revaluation facility shall be for theory papers only. The revaluation of answer book shall not be permitted in respect of the marks awarded to the scripts of practical examination / project work (including theory part) and in viva voce / oral / comprehensive examinations.

The re-evaluation will be done by a second independent examiner. The result after re-evaluation shall be as follows:

1. The revaluation marks are considered only if the difference between the original award and award on reevaluation is more than equal to 15% of 60 marks (09 marks).
2. If the difference between the original award and the award on reevaluation is more than 20% (12 marks), a third evaluator is to be appointed and the average of two nearest awards (in the range of 15%) shall be considered.

16. PROMOTION POLICIES

The following academic requirements have to be satisfied in addition to the attendance requirements mentioned in item no. 9.

16.1 For students admitted into B.Tech (Regular) program

16.1.1 A student will not be promoted from II semester to III semester unless s/he fulfills the academic requirement of securing 50% of the total credits (rounded to the next lowest integer) from I and II semester examinations, whether the candidate takes the examination(s) or not.

16.1.2 A student will not be promoted from IV semester to V semester unless s/he fulfills the academic requirement of securing 60% of the total credits (rounded to the next lowest integer) upto III semester **or** 60% of the total credits (rounded to the next lowest integer) up to IV semester, from all the examinations, whether the candidate takes the examination(s) or not.

16.1.3 A student shall be promoted from VI semester to VII semester only if s/he fulfills the academic requirements of securing 60% of the total credits (rounded to the next lowest integer) up to V semester **or** 60% of the total credits (rounded to the next lowest integer) up to VI semester from all the examinations, whether the candidate takes the examination(s) or not.

16.1.4 A student shall register for all the 160 credits and earn all the 160 credits. Marks obtained in all the 160 credits shall be considered for the award of the Grade.

16.2 For students admitted into B.Tech (Lateral entry students)

16.2.1 A student will not be promoted from IV semester to V semester unless s/he fulfills the academic requirement of securing 60% of the total credits (rounded to the next lowest integer) up to IV semester, from all the examinations, whether the candidate takes the examination(s) or not.

16.2.2 A student shall be promoted from VI semester to VII semester only if s/he fulfills the academic requirements of securing 60% of the total credits (rounded to the next lowest integer) up to V semester **or** 60% of the total credits (rounded to the next lowest integer) up to VI semester from all the examinations, whether the candidate takes the examination(s) or not.

16.2.3 A student shall register for all the 120 credits and earn all the 120 credits. Marks obtained in all the 120 credits shall be considered for the award of the Grade.

17. GRADUATION REQUIREMENTS

The following academic requirements shall be met for the award of the B.Tech degree.

17.1 Student shall register and acquire minimum attendance in all courses and secure 160 credits (with minimum CGPA of 5.0), for regular program and 120 credits (with minimum CGPA of 5.0), for lateral entry program. **There is NO exemption of credits in any case.**

17.2 A student of a regular program, who fails to earn 160 credits within **eight consecutive academic years** from the year of his/her admission with a minimum CGPA of 5.0, shall forfeit his/her degree and his/her admission stands cancelled.

17.3 A student of a lateral entry program who fails to earn 120 credits within **six consecutive academic years** from the year of his/her admission with a minimum CGPA of 5.0, shall forfeit his/her degree and his/her admission stands cancelled.

18. AWARD OF DEGREE

18.1 Classification of degree will be as follows:

CGPA > 8.0	CGPA ≥ 7.0 and < 8.0	CGPA ≥ 6.0 and < 7.0	CGPA ≥ 5.0 and < 6.0	CGPA < 5.0
First Class with Distinction	**First Class**	**Second Class**	**Pass Class**	**Fail**

18.2 A student with final CGPA (at the end of the under graduate programme) >8.0, and fulfilling the following conditions - shall be placed in '**first class with distinction'**. However,

a. Should have passed all the courses in '**first appearance'** within the first 4 academic years (or 8 sequential semesters) from the date of commencement of first semester.

b. Should have secured a CGPA >8.0, at the end of each of the 8 sequential semesters, starting from first semester onwards.

c. Should not have been detained or prevented from writing the semester end examinations in any semester due to shortage of attendance or any other reason.

d. A student not fulfilling any of the above conditions with final CGPA >8.0 shall be placed in **'first class'.**

18.3 Students with final CGPA (at the end of the B.Tech program) ≥7.0 but <8.0 shall be placed in **'first class'.**

18.4 Students with final CGPA (at the end of the B.Tech program) ≥6.0 but <7.0, shall be placed in '**second class**'.

18.5 All other students who qualify for the award of the degree (as per item 18), with final CGPA (at the end of the B.Tech program) ≥5.0 but <6.0, shall be placed in '**pass class**'.

18.6 A student with final CGPA (at the end of the B.Tech program) <5.0 will not be eligible for the award of the degree.

18.7 Students fulfilling the conditions listed under item 18.2 alone will be eligible for award of '**Gold Medal**'.

All the candidates who register for the semester end examination will be issued a memorandum of grades sheet by the institute. Apart from the semester wise memorandum of grades sheet, the institute will issue the provisional certificate and consolidated grades memorandum course to the fulfillment of all the academic requirements.

19. B.TECH WITH HONOURS OR MINOR IN ENGINEERING

Students acquiring 160 credits are eligible to get B.Tech degree in Engineering. A student will be eligible to get B.Tech degree with Honours or Minor in Engineering, if s/he completes an additional 20/18 credits (3/4 credits per course). These could be acquired through MOOCs from SWAYAM / NPTEL only. The list for MOOCs will be a dynamic one, as new courses are added from time to time. Few essential skill sets required for employability are also identified year wise. Students interested in doing MOOC courses shall register the course title at their department office at the start of the semester against the courses that are announced by the department. Any expense incurred for the MOOC course / summer program should be met by the students.

Students having no credit arrears and a CGPA of 7.5 or above at the end of the fourth semester are eligible to register for B.Tech (Honours / Minor). After registering for the B.Tech (Honours / Minor) program, if a student fails in any course, s/he will not be eligible for B.Tech (Honours / Minor).

Every department should develop and submit a Honours / Minor – courses list of 5 - 6 theory courses, laboratory and project work.

Honours Certificate for Vertical in his/her OWN Branch for Research orientation; Minor in any other branch for Improving Employability.

Honours will be reflected in the degree certificate as "B.Tech (Honours) in XYZ Engineering". Similarly, Minor as "B.Tech in XYZ Engineering with Minor in ABC".

19.1. B.Tech with Honours

The key objectives of offering B. Tech. with Honors program are:

- To expand the domain knowledge of the students laterally and vertically.
- To increase the employability of undergraduate students with expanded knowledge in one of the core engineering disciplines.
- To provide an opportunity to students to pursue their higher studies in wider range of specializations.

Academic Regulations for B. Tech. Honours degree

1. The weekly instruction hours, internal and external evaluation and award of grades are on par with regular 4-Years B. Tech. program.
2. For B. Tech with Honors program, a student needs to earn additional 20 credits (over and above the required 160 credits for B. Tech degree). All these 20 credits required to be attained for B.Tech Honors degree credits are distributed from V semester to VII semester.
3. After registering for the Honors program, if a student is unable to pass all courses in first attempt and earn the required 20 credits, he/she shall not be awarded Honours degree. However, if the student earns all the required 160 credits of B. Tech., he/she will be awarded only B. Tech degree in the concerned branch.
4. There is no transfer of credits from courses of Honors program to regular B. Tech. degree course & vice versa.
5. These **20 credits** are to be earned from the additional courses offered by the host department in the institute or from closely related departments in the institute as well as from the MOOCS platform (NPTEL only).

6. The choice to opt/take the Honors program is purely on the choice of the students.
7. The student shall be given a choice of withdrawing all the courses registered and/or the credits earned for Honours program at any time; and in that case the student will be awarded only B.Tech. degree in the concerned branch on earning the required credits of 160.
8. The students of every branch can choose Honours program in their respective branches if they are eligible for the Honors program. A student who chooses an **Honors program is not eligible to choose a Minor program and vice-versa.**
9. A student can graduate with Honors if he/she fulfils the requirements for his/her regular B.Tech. program as well as fulfills the requirements for Honours program.
10. The institute shall maintain a record of students registered and pursuing their Honors programs branch-wise.
11. The department shall prepare the time-tables for each Honors program offered at their respective departments without any overlap/clash with other courses of study in the respective semesters.

Eligibility conditions of the students for the B.Tech Honors degree

a) A student can opt for B.Tech. degree with Honors, if she/he passed all courses in first attempt in all the semesters till the results announced and maintaining **7.5 or more CGPA.**

b) If a student fails in any registered course of either B.Tech or Honours in any semester of four years program, he/she will not be eligible for obtaining Honors degree. He will be eligible for only

c) Prior approval of mentor and Head of the Department for the enrolment into Honors program, before commencement of V Semester, is mandatory.

d) If more than **30% of the students** in a branch fulfill the eligibility criteria (as stated above), the number of students given eligibility should be limited to 30%. The criteria to be followed for choosing 30% candidates in a branch may be the CGPA secured by the students till **III** semester.

e) Successful completion of **20 credits** earmarked for Honours program with at least 7.5 CGPA along with successful completion of 160 credits earmarked for regular B. Tech. Program with at least 7.5 CGPA and passing all courses in first attempt gives the eligibility for the award of B.Tech (Honors) degree.

f) For CGPA calculation of B.Tech. course, the **20 credits** of Honours program will not be considered.

Following are the details of such Honors which include some of the most interesting areas in the profession today:

S. No	Department	Honors scheme
1	Aeronautical Engineering	Aerospace Engineering / Space Science etc.
2	Computer Science and Engineering / Information Technology	Big data and Analytics / Cyber Physical Systems, Information Security / Cognitive Science / Artificial Intelligence/ Machine Learning / Data Science / Internet of Things (IoT) / Cyber Security etc.
3	Electronics and Communication Engineering	Digital Communication / Signal Processing / Communication Networks / VLSI Design / Embedded Systems etc.
4	Electrical and Electronics Engineering	Renewable Energy systems / Energy and Sustainability / IoT Applications in Green Energy Systems etc.
5	Mechanical Engineering	Industrial Automation and Robotics / Manufacturing Sciences and Computation Techniques etc.
6	Civil Engineering	Structural Engineering / Environmental Engineering etc.

19.2 B.Tech with Minor in Engineering

The key objectives of offering B.Tech with Minor program are:

- To expand the domain knowledge of the students in one of the other branches of engineering.
- To increase the employability of undergraduate students keeping in view of better opportunity in interdisciplinary areas of engineering & technology.
- To provide an opportunity to students to pursue their higher studies in the inter-disciplinary areas in addition to their own branch of study.
- To offer the knowledge in the areas which are identified as emerging technologies/thrust areas of Engineering.

Advantages of Minor in Engineering

The minors mentioned above are having lots of advantages and a few are listed below:

- To enable students to pursue allied academic interest in contemporary areas.
- To provide an academic mechanism for fulfilling multidisciplinary demands of industries.
- To provide effective yet flexible options for students to achieve basic to intermediate level competence in the Minor area.
- Provides an opportunity to students to become entrepreneurs and leaders by taking business/management minor.
- Combination in the diverse fields of engineering e.g., CSE (Major) + Electronics (Minor) combination increases placement prospects in chip designing companies.
- Provides an opportunity for applicants to pursue higher studies in an inter-disciplinary field of study.
- To increase the overall scope of the undergraduate degrees.

Academic Regulations for B.Tech Degree with Minor programs

1. The weekly instruction hours, internal & external evaluation and award of grades are on par with regular 4-Years B. Tech. program.
2. For B. Tech. with Minor, a student needs to earn additional 18 credits (over and above the required 160 credits for B. Tech degree). The courses are offered from V semester to VII semester only, to obtain minor degree studens required to obtain 18 credits.
3. After registering for the Minor program, if a student is unable to earn all the required 18 credits in a specified duration (twice the duration of the course), he/she shall not be awarded Minor degree. However, if the student earns all the required 160 credits of B.Tech, he/she will be awarded only B. Tech degree in the concerned branch.
4. There is no transfer of credits from Minor program courses to regular B. Tech. degree course & vice versa.
5. These 18 credits are to be earned from the additional courses offered by the host department in the institute as well as from the MOOCs platform.
6. For the course selected under MOOCs platform (NPTEL) following guidelines may be followed:
   a) Prior to registration of MOOCs courses, formal approval of the courses, by the institute is essential, before the issue of approval considers the parameters like the institute / agency which is offering the course, syllabus, credits, duration of the program and mode of evaluation etc.
   b) Minimum credits for MOOCs course must be equal to or more than the credits specified in the Minor course structure provided by the institute.
   c) Only Pass-grade / marks or above shall be considered for inclusion of grades in minor grade memo.

d) Any expenses incurred for the MOOCs courses are to be met by the students only.

7. The choice to opt / take a Minor program is purely on the choice of the students.
8. The student shall be given a choice of withdrawing all the courses registered and / or the credits earned for Minor program at any time; and in that case the student will be awarded only B. Tech. degree in the concerned branch on earning the required credits of 160.
9. The student can choose only one Minor program along with his / her basic engineering degree. A student who chooses an **Honors program is not eligible to choose a Minor program and vice-versa.**
10. The institute shall maintain a record of students registered and pursuing their Minor programs, minor program-wise and parent branch-wise.
11. The institute / department shall prepare the time-tables for each Minor course offered at their respective institutes without any overlap/clash with other courses of study in the respective semesters.

Eligibility conditions for the student to register for Minor course

a) A student can opt for B.Tech. degree with Minor program if she/he has no active backlogs till III semester at the time of entering into III year I semester.

b) Prior approval of mentor and Head of the Department for the enrolment into Minor program, before commencement of III year I Semester (V Semester), is mandatory.

c) If more than 50% of the students in a branch fulfill the eligibility criteria (as stated above), the number of students given eligibility should be limited to 50%.

20.0 TEMPORARY BREAK OF STUDY FROM THE PROGRAM

20.1 A candidate is normally not permitted to take a break from the study. However, if a candidate intends to temporarily discontinue the program in the middle for valid reasons (such as accident or hospitalization due to prolonged ill health) and to rejoin the program in a later respective semester, s/he shall seek the approval from the Principal in advance. Such application shall be submitted before the last date for payment of examination fee of the semester and forwarded through the Head of the Department stating the reasons for such withdrawal together with supporting documents and endorsement of his / her parent / guardian.

20.2 The institute shall examine such an application and if it finds the case to be genuine, it may permit the student to temporarily withdraw from the program. Such permission is accorded only to those who do not have any outstanding dues / demand at the College / University level including tuition fees, any other fees, library materials etc.

20.3 The candidate has to rejoin the program after the break from the commencement of the respective semester as and when it is offered.

20.4 The total period for completion of the program reckoned from the commencement of the semester to which the candidate was first admitted shall not exceed the maximum period specified in clause 17. The maximum period includes the break period.

20.5 If any candidate is detained for any reason, the period of detention shall not be considered as 'Break of Study'.

21. TERMINATION FROM THE PROGRAM

The admission of a student to the program may be terminated and the student is asked to leave the institute in the following circumstances:

a. The student fails to satisfy the requirements of the program within the maximum period stipulated for that program.

b. A student shall not be permitted to study any semester more than three times during the entire program of study.
c. The student fails to satisfy the norms of discipline specified by the institute from time to time.

22. WITH-HOLDING OF RESULTS

If the candidate has not paid any dues to the institute / if any case of indiscipline / malpractice is pending against him, the results and the degree of the candidate will be withheld.

23. GRADUATION DAY

The institute shall have its own annual Graduation Day for the award of degrees to the students completing the prescribed academic requirements in each case, in consultation with the University and by following the provisions in the Statute. The college shall institute prizes and medals to meritorious students and award them annually at the Graduation Day. This will greatly encourage the students to strive for excellence in their academic work.

24. DISCIPLINE

Every student is required to observe discipline and decorum both inside and outside the institute and are expected not to indulge in any activity which will tend to bring down the honour of the institute. If a student indulges in malpractice in any of the theory / practical examination, continuous assessment examinations, he/she shall be liable for punitive action as prescribed by the institute from time to time.

25. GRIEVANCE REDRESSAL COMMITTEE

The institute shall form a Grievance Redressal Committee for each course in each department with the Course Teacher and the HOD as the members. The committee shall solve all grievances related to the course under consideration.

26. TRANSITORY REGULATIONS

A candidate, who is detained or has discontinued a semester, on readmission shall be required to do all the courses in the curriculum prescribed for the batch of students in which the student joins subsequently. However, exemption will be given to those candidates who have already passed such courses in the earlier semester(s) he was originally admitted into and substitute courses were offered in place of them as decided by the Board of Studies. However, the decision of the Board of Studies will be final.

a) Transfer candidates (from non-autonomous college affiliated to JNTUH):

A student who is following JNTUH curriculum, transferred from other college to this institute in third semester or subsequent semesters shall join with the autonomous batch in the appropriate semester. Such candidates shall be required to pass in all the courses in the program prescribed by the Board of Studies concerned for that batch of students from that semester onwards to be eligible for the award of degree. However, exemption will be given in the courses of the semester(s) of the batch which he had passed earlier and substitute courses are offered in their place as decided by the Board of Studies. The student has to clear all his backlog courses up to previous semester by appearing for the supplementary examinations conducted by JNTUH for the award of degree. The total number of credits to be secured for the award of the degree will be the sum of the credits up to the previous semester under JNTUH regulations and the credits prescribed for the semester in which a candidate joined after transfer and subsequent semesters under the autonomous status. The class will be awarded based on the academic performance of a student in the autonomous pattern.

b) Transfer candidates (from an autonomous college affiliated to JNTUH):

A student who has secured the required credits up to previous semester as per the regulations of other autonomous institutions shall also be permitted to be transferred to this institute. A student who is transferred from the other autonomous colleges to this institute in third semester or subsequent semesters shall join with the autonomous batch in the appropriate semester. Such candidates shall be required to pass in all the courses in the program prescribed by the Board of

Studies concerned for that batch of students from that semester onwards to be eligible for the award of degree. However, exemption will be given in the courses of the semester(s) of the batch which he had passed earlier and substitute courses are offered in their place as decided by the Board of Studies. The total number of credits to be secured for the award of the degree will be the sum of the credits up to previous semester as per the regulations of the college from which he is transferred and the credits prescribed for the semester in which a candidate joined after transfer and subsequent semesters under the autonomous status. The class will be awarded based on the academic performance of a student in the autonomous pattern.

c) Readmission from R18 / UG20 to BT23 regulations

A student took admission in BT23 Regulations, detained due to lack of required number of credits or shortage of attendance at the end of any semester is permitted to take re-admission at appropriate level under any regulations prevailing in the institute course to the following rules and regulations.

1. Student shall pass all the courses in the earlier scheme of regulations. However, in case of having backlog courses, they shall be cleared by appearing for supplementary examinations conducted under earlier regulations from time to time.
2. After readmission, the student is required to study the courses as prescribed in the new regulations for the re-admitted program at that level and thereafter.
3. If the student has already passed any course(s) of readmitted program in the earlier regulation / semester of study, such courses are exempted.
4. The courses that are not done in the earlier regulations / semester as compared need to be cleared after readmission by appearing for the examinations conducted time to time under the new regulations.
5. In general, after transition, course composition and number of credits / semester shall be balanced between old and new regulations on case to case basis.
6. In case, the students who do not have option of acquiring required credits with the existing courses offered as per the new curriculum under autonomy, credit balance can be achieved by clearing the additional courses offered. The additional courses that are offered can be of theory or laboratory courses.

27. REVISION OF REGULATIONS AND CURRICULUM

The Institute from time to time may revise, amend or change the regulations, scheme of examinations and syllabi if found necessary and on approval by the Academic Council and the Governing Body shall be binding on the students, faculty, staff, all authorities of the Institute and others concerned.

FREQUENTLY ASKED QUESTIONS AND ANSWERS ABOUT AUTONOMY

1. Who grants Autonomy? UGC, Govt., AICTE or University

In case of Colleges affiliated to a university and where statutes for grant of autonomy are ready, it is the respective University that finally grants autonomy but only after concurrence from the respective state Government as well as UGC. The State Government has its own powers to grant autonomy directly to Govt. and Govt. aided Colleges.

2 Shall IARE award its own Degrees?

No. Degree will be awarded by Jawaharlal Nehru Technological University, Hyderabad with a mention of the name IARE on the Degree Certificate.

3 What is the difference between a Deemed University and an Autonomy College?

A Deemed University is fully autonomous to the extent of awarding its own Degree. A Deemed University is usually a Non-Affiliating version of a University and has similar responsibilities like any University. An Autonomous College enjoys Academic Autonomy alone. The University to which an autonomous college is affiliated will have checks on the performance of the autonomous college.

4 How will the Foreign Universities or other stake – holders know that we are an Autonomous College?

Autonomous status, once declared, shall be accepted by all the stake holders. The Govt. of Telangana mentions autonomous status during the First Year admission procedure. Foreign Universities and Indian Industries will know our status through our website.

5 What is the change of Status for Students and Teachers if we become Autonomous?

An autonomous college carries a prestigious image. Autonomy is actually earned out of our continued past efforts on academic performances, our capability of self- governance and the kind of quality education we offer.

6 Who will check whether the academic standard is maintained / improved after Autonomy? How will it be checked?

There is a built in mechanism in the autonomous working for this purpose. An Internal Committee called Academic Program Evaluation Committee, which will keep a watch on the academics and keep its reports and recommendations every year. In addition the highest academic council also supervises the academic matters. The standards of our question papers, the regularity of academic calendar, attendance of students, speed and transparency of result declaration and such other parameters are involved in this process.

7 Will the students of IARE as an Autonomous College qualify for University Medals and Prizes for academic excellence?

No. IARE has instituted its own awards, medals, etc. for the academic performance of the students. However for all other events like sports, cultural on co-curricular organized by the University the students shall qualify.

8 Can IARE have its own Convocation?

No. Since the University awards the degree the convocation will be that of the University, but there will be Graduation Day at IARE.

9 Can IARE give a provisional degree certificate?

Since the examinations are conducted by IARE and the results are also declared by IARE, the college sends a list of successful candidates with their final Grades and Grade Point Averages including CGPA to the affiliating university. Therefore with the prior permission of the university the institute will be entitled to give the provisional certificate.

10 Will Academic Autonomy make a positive impact on the Placements or Employability?

Certainly. The number of students qualifying for placement interviews is expected to improve, due to rigorous and repetitive classroom teaching and continuous assessment. Also the autonomous status is more responsive to the needs of the industry. As a result therefore, there will be a lot of scope for industry oriented skill development built-in into the system. The graduates from an autonomous college will therefore represent better employability.

11 What is the proportion of Internal and External Assessment as an Autonomous College?

Presently, it is 60% external and 40% internal. As the autonomy matures the internal assessment component shall be increased at the cost of external assessment.

12 Is it possible to have complete Internal Assessment for Theory or Practicals?

Yes indeed. We define our own system. We have the freedom to keep the proportion of external and internal assessment component to choose.

13 Why Credit based Grade System?

The credit based grade system is an accepted standard of academic performance the world over in all Universities. The acceptability of our graduates in the world market shall improve.

14 What exactly is a Credit based Grade System?

The credit based grade system defines a much better statistical way of judging the academic performance. One Lecture Hour per week of Teaching Learning process is assigned One Credit. One hour of laboratory work is assigned half credit. Letter Grades like A, B,C,D, etc. are assigned for a Range of Marks. (e.g. 91% and above is A+, 80 to 90 % could be A etc.) in Absolute Grading System while grades are awarded by statistical analysis in relative grading system. We thus dispense with sharp numerical boundaries. Secondly, the grades are associated with defined Grade Points in the scale of 1 to 10. Weighted Average of Grade Points is also defined Grade Points are weighted by Credits and averaged over total credits in a Semester. This process is repeated for all Semesters and a CGPA defines the Final Academic Performance

15 What are the norms for the number of Credits per Semester and total number of Credits for UG/PG program?

These norms are usually defined by UGC or AICTE. Usually around 25 Credits per semester is the accepted norm.

16 What is a Semester Grade Point Average (SGPA)?

The performance of a student in a semester is indicated by a number called SGPA. The SGPA is the weighted average of the grade points obtained in all the courses registered by the student during the semester.

$$SGPA = \sum_{i=1}^{n} (C_i G_i) / \sum_{i=1}^{n} C_i$$

Where, C_i is the number of credits of the ith course and G_i is the grade point scored by the student in the ith course and i represent the number of courses in which a student registered in the concerned semester. SGPA is rounded to two decimal places.

17 What is a Cumulative Grade Point Average (CGPA)?

An up-to-date assessment of overall performance of a student from the time of his first registration is obtained by calculating a number called CGPA, which is weighted average of the grade points obtained in all the courses registered by the students since he entered the Institute.

$$CGPA = \sum_{j=1}^{m} \left(C_j S_j \right) / \sum_{j=1}^{m} C_j$$

Where, S_j is the SGPA of the jth semester and C_j is the total number of credits upto the semester and m represent the number of semesters completed in which a student registered upto the semester. CGPA is rounded to two decimal places.

18 Is there any Software available for calculating Grade point averages and converting the same into Grades?

Yes, The institute has its own MIS software for calculation of SGPA, CGPA, etc.

19 Will the teacher be required to do the job of calculating SGPAs etc. and convert the same into Grades?

No. The teacher has to give marks obtained out of whatever maximum marks as it is. Rest is all done by the computer.

20 Will there be any Revaluation or Re-Examination System?

No. There will double valuation of answer scripts. There will be a makeup Examination after a reasonable preparation time after the End Semester Examination for specific cases mentioned in the Rules and Regulations. In addition to this, there shall be a 'summer term' (compressed term) followed by the End Semester Exam, to save the precious time of students.

21 How fast Syllabi can be and should be changed?

Autonomy allows us the freedom to change the syllabi as often as we need.

22 Will the Degree be awarded on the basis of only final year performance?

No. The CGPA will reflect the average performance of all the semester taken together.

23 What are Statutory Academic Bodies?

Governing Body, Academic Council, Examination Committee and Board of Studies are the different statutory bodies. The participation of external members in everybody is compulsory. The institute has nominated professors from IIT, NIT, University (the officers of the rank of Pro-vice Chancellor, Deans and Controller of Examinations) and also the reputed industrialist and industry experts on these bodies.

24 Who takes Decisions on Academic matters?

The Governing Body of institute is the top academic body and is responsible for all the academic decisions. Many decisions are also taken at the lower level like Boards of Studies. Decisions taken at the Boared of Studies level are to be ratified at the Academic Council and Governing Body.

25 What is the role of Examination committee?

The Examinations Committee is responsible for the smooth conduct of internal, End Semester and make up Examinations. All matters involving the conduct of examinations spot valuations, tabulations preparation of Grade Sheet etc fall within the duties of the Examination Committee.

26 Is there any mechanism for Grievance Redressal?

The institute has grievance redressal committee, headed by Dean - Student affairs and Dean - IQAC.

27 How many attempts are permitted for obtaining a Degree?

All such matters are defined in Rules & Regulation.

28 Who declares the result?

The result declaration process is also defined. After tabulation work wherein the SGPA, CGPA and final Grades are ready, the entire result is reviewed by the Moderation Committee. Any unusual

deviations or gross level discrepancies are deliberated and removed. The entire result is discussed in the Examinations and Result Committee for its approval. The result is then declared on the institute notice boards as well put on the web site and Students Corner. It is eventually sent to the University.

29 Who will keep the Student Academic Records, University or IARE?

It is the responsibility of the Examination Control Office of the institute to keep and preserve all the records.

30 What is our relationship with the JNT University?

We remain an affiliated college of the JNT University. The University has the right to nominate its members on the academic bodies of the college.

31 Shall we require University approval if we want to start any New Courses?

Yes, It is expected that approvals or such other matters from an autonomous college will receive priority.

32 Shall we get autonomy for PG and Doctoral Programs also?

Yes, presently our PG programs also enjoying autonomous status.

MALPRACTICE RULES

DISCIPLINARY ACTION FOR / IMPROPER CONDUCT IN EXAMINATIONS

S. No	Nature of Malpractices / Improper conduct	Punishment
	If the candidate:	
1. (a)	Possesses or keeps accessible in examination hall, any paper, note book, programmable calculator, cell phone, pager, palm computer or any other form of material concerned with or related to the course of the examination (theory or practical) in which he is appearing but has not made use of (material shall include any marks on the body of the candidate which can be used as an aid in the course of the examination)	Expulsion from the examination hall and cancellation of the performance in that course only.
(b)	Gives assistance or guidance or receives it from any other candidate orally or by any other body language methods or communicates through cell phones with any candidate or persons in or outside the exam hall in respect of any matter.	Expulsion from the examination hall and cancellation of the performance in that course only of all the candidates involved. In case of an outsider, he will be handed over to the police and a case is registered against him.
2.	Has copied in the examination hall from any paper, book, programmable calculators, palm computers or any other form of material relevant to the course of the examination (theory or practical) in which the candidate is appearing.	Expulsion from the examination hall and cancellation of the performance in that course and all other courses the candidate has already appeared including practical examinations and project work and shall not be permitted to appear for the remaining examinations of the courses of that Semester/year. The Hall Ticket of the candidate is to be cancelled and sent to the Controller of Examinations.
3.	Impersonates any other candidate in connection with the examination.	The candidate who has impersonated shall be expelled from examination hall. The candidate is also debarred and forfeits the seat. The performance of the original candidate, who has been impersonated, shall be cancelled in all the courses of the examination (including practicals and project work) already appeared and shall not be allowed to appear for examinations of the remaining courses of that semester/year. The candidate is also debarred for two consecutive semesters from class work and all semester end examinations. The continuation of the course by the candidate is course to the academic regulations in connection with forfeiture of seat. If the imposter is an outsider, he will be handed over to the police and a case is registered against him.
4.	Smuggles in the Answer book or additional sheet or takes out or arranges to send out the	Expulsion from the examination hall and cancellation of performance in that course

	question paper during the examination or answer book or additional sheet, during or after the examination.	and all the other courses the candidate has already appeared including practical examinations and project work and shall not be permitted for the remaining examinations of the courses of that semester/year. The candidate is also debarred for two consecutive semesters from class work and all semester end examinations. The continuation of the course by the candidate is course to the academic regulations in connection with forfeiture of seat.
5.	Uses objectionable, abusive or offensive language in the answer paper or in letters to the examiners or writes to the examiner requesting him to award pass marks.	Cancellation of the performance in that course.
6.	Refuses to obey the orders of the Controller of Examinations /Additional Controller of Examinations/any officer on duty or misbehaves or creates disturbance of any kind in and around the examination hall or organizes a walk out or instigates others to walk out, or threatens the COE or any person on duty in or outside the examination hall of any injury to his person or to any of his relations whether by words, either spoken or written or by signs or by visible representation, assaults the COE or any person on duty in or outside the examination hall or any of his relations, or indulges in any other act of misconduct or mischief which result in damage to or destruction of property in the examination hall or any part of the Institute premises or engages in any other act which in the opinion of the officer on duty amounts to use of unfair means or misconduct or has the tendency to disrupt the orderly conduct of the examination.	In case of students of the college, they shall be expelled from examination halls and cancellation of their performance in that course and all other courses the candidate(s) has (have) already appeared and shall not be permitted to appear for the remaining examinations of the courses of that semester/year. The candidates also are debarred and forfeit their seats. In case of outsiders, they will be handed over to the police and a police case is registered against them.
7.	Leaves the exam hall taking away answer script or intentionally tears off the script or any part thereof inside or outside the examination hall.	Expulsion from the examination hall and cancellation of performance in that course and all the other courses the candidate has already appeared including practical examinations and project work and shall not be permitted for the remaining examinations of the courses of that semester/year. The candidate is also debarred for two consecutive semesters from class work and all semester end examinations. The continuation of the course by the candidate is course to the academic regulations in connection with forfeiture of seat.
8.	Possess any lethal weapon or firearm in the examination hall.	Expulsion from the examination hall and cancellation of the performance in that course and all other courses the candidate has already appeared including practical examinations and project work and shall not

		be permitted for the remaining examinations of the courses of that semester/year. The candidate is also debarred and forfeits the seat.
9.	If student of the college, who is not a candidate for the particular examination or any person not connected with the college indulges in any malpractice or improper conduct mentioned in clause 6 to 8.	Student of the colleges expulsion from the examination hall and cancellation of the performance in that course and all other courses the candidate has already appeared including practical examinations and project work and shall not be permitted for the remaining examinations of the courses of that semester/year. The candidate is also debarred and forfeits the seat. Person(s) who do not belong to the College will be handed over to police and, a police case will be registered against them.
10.	Comes in a drunken condition to the examination hall.	Expulsion from the examination hall and cancellation of the performance in that course and all other courses the candidate has already appeared including practical examinations and project work and shall not be permitted for the remaining examinations of the courses of that semester/year.
11.	Copying detected on the basis of internal evidence, such as, during valuation or during special scrutiny.	Cancellation of the performance in that course and all other courses the candidate has appeared including practical examinations and project work of that semester/year examinations.
12.	If any malpractice is detected which is not covered in the above clauses 1 to 11 shall be reported to the University for further action to award suitable punishment.	

FAILURE TO READ AND UNDERSTAND THE REGULATIONS IS NOT AN EXCUSE

INSTITUTE OF AERONAUTICAL ENGINEERING

(Autonomous)

Dundigal, Hyderabad - 500 043

COURSE CATALOGUE

REGULATIONS: BT-23

COMPUTER SCIENCE AND ENGINEERING

I SEMESTER

Course Code	Course Name	Subject Area	Category	Periods Per Week			Credits	Scheme of Examination Max. Marks		
				L	T	P		CIA	SEE	Total
INDUCTION PROGRAM			**TWO WEEKS MANDATORY AUDIT COURSE**							
THEORY										
AHSD02	Matrices and Calculus	BSC	Foundation	3	1	0	4	40	60	100
AHSD03	Engineering Chemistry	BSC	Foundation	3	0	0	3	40	60	100
AHSD07	Applied Physics	BSC	Foundation	3	0	0	3	40	60	100
ACSD01	Object Oriented Programming	ESC	Foundation	3	0	0	3	40	60	100
PRACTICAL										
AHSD09	Applied Physics Laboratory	BSC	Foundation	0	0	2	1	40	60	100
ACSD02	Object Oriented Programming with Java Laboratory	ESC	Foundation	0	1	2	2	40	60	100
AHSD05	Engineering Chemistry Laboratory	BSC	Foundation	0	0	2	1	40	60	100
AMED03	Engineering Graphics	ESC	Foundation	1	0	2	2	40	60	100
SKILL ENHANCEMENT PROJECT										
ACSD04	Mobile Applications Development	Skill	Skill	0	0	2	1	40	60	100
MANDATORY COURSE										
AHSD06	Environmental Science	MC	MC - I	**Ref: Academic Regulations BT23**						
TOTAL				**13**	**02**	**10**	**20**	**360**	**540**	**900**

II SEMESTER

Course Code	Course Name	Subject Area	Category	Periods Per Week			Credits	Scheme of Examination Max. Marks		
				L	T	P		CIA	SEE	Total
THEORY										
AHSD01	Professional Communication	HSMC	Foundation	3	0	0	3	40	60	100
AHSD08	Differential Equations and Vector Calculus	BSC	Foundation	3	1	0	4	40	60	100
ACSD05	Essentials of Problem Solving	ESC	Foundation	3	0	0	3	40	60	100
AEED01	Elements of Electrical and Electronics Engineering	ESC	Foundation	3	0	0	3	40	60	100
PRACTICAL										
AHSD04	Professional Communication Laboratory	HSMC	Foundation	0	0	2	1	40	60	100
ACSD06	Programming for Problem Solving Laboratory	ESC	Foundation	0	1	2	2	40	60	100
AMED02	Manufacturing Practice	ESC	Foundation	1	0	2	2	40	60	100
AEED03	Electrical and Electronics Engineering Laboratory	ESC	Foundation	0	0	2	1	40	60	100
EXPERIENTIAL ENGINEERING EDUCATION (ExEED)										
ACSD03	Essentials of Innovation	Skill	Skill	0	0	2	1	40	60	100
MANDATORY COURSE										
AHSD10	Gender Sensitization	MC	MC - II	**Ref: Academic Regulations BT23**						
FIELD PROJECT										
STOTAL				**13**	**02**	**10**	**20**	**360**	**540**	**900**

III SEMESTER

Course Code	Course Name	Subject Area	Category	Periods per week			Credits	Scheme of Examination Max. Marks		
				L	T	P		CIA	SEE	Total
THEORY										
AECD04	Digital Design and Embedded Systems	ESC	Foundation	3	0	0	3	40	60	100
ACSD08	Data Structures	PCC	Core	3	0	0	3	40	60	100
ACSD09	Computer Architectures and Operating Systems	PCC	Core	3	0	0	3	40	60	100
AHSD11	Probability and Statistics	PCC	Core	3	1	0	4	40	60	100
AITD01	Mathematics for Computing	PCC	Core	3	0	0	3	40	60	100
PRACTICAL										
ACSD10	Operating Systems Laboratory	PCC	Core	0	0	2	1	40	60	100
ACSD11	Data Structures Laboratory	PCC	Core	0	0	2	1	40	60	100
AITD02	Programming with Objects Laboratory	PCC	Core	0	0	2	1	40	60	100
EXPERIENTIAL ENGINEERING EDUCATION (ExEED)										
ACSD12	Prototype and Design Building	Skill	Skill	0	0	2	1	40	60	100
VALUE ADDED COURSE										
TOTAL				**15**	**01**	**08**	**20**	**360**	**540**	**900**

IV SEMESTER

Course Code	Course Name	Subject Area	Category	Periods per week			Credits	Scheme of Examination Max. Marks		
				L	T	P		CIA	SEE	Total
THEORY										
ACSD13	Design and Analysis of Algorithms	PCC	Core	3	0	0	3	40	60	100
ACSD14	Web Systems Engineering	PCC	Core	3	0	0	3	40	60	100
ACSD15	Object Oriented Software Engineering	PCC	Core	3	0	0	3	40	60	100
AITD03	Database Management Systems	PCC	Core	3	0	0	3	40	60	100
AITD04	Computer Networks	PCC	Core	3	0	0	3	40	60	100
PRACTICAL										
ACSD16	Design and Analysis of Algorithms Laboratory	PCC	Core	0	0	2	1	40	60	100
ACSD17	Web Systems Engineering Laboratory	PCC	Core	0	0	2	1	40	60	100
AITD05	Database Management Systems Laboratory	PCC	Core	0	0	2	1	40	60	100
SKILL ENHANCEMENT PROJECT										
ACSD18	DevOps Engineer #	Skill	Skill	1	0	2	2	40	60	100
VALUE ADDED COURSE										
INTERNSHIP										
TOTAL				**16**	**00**	**08**	**20**	**360**	**540**	**900**

#The course would consist of talks by working professionals from industry, government, academia & research organizations.

V SEMESTER

Course Code	Course Name	Subject Area	Category	Periods per week			Credits	Scheme of Examination Max. Marks		
				L	T	P		CIA	SEE	Total
THEORY										
	Data Mining and Knowledge Discovery	PCC	Core	3	0	0	3	40	60	100
	Information Security Management	PCC	Core	3	0	0	3	40	60	100
	Cloud Application Development	PCC	Core	3	0	0	3	40	60	100
	Artificial Intelligence	PCC	Core	3	0	0	3	40	60	100
	Program Elective – I	PEC	Elective	3	0	0	3	40	60	100
PRACTICAL										
	Artificial Intelligence Laboratory	PCC	Core	0	0	2	1	40	60	100
	Cloud Application Development Laboratory	PCC	Core	0	0	2	1	40	60	100
SKILL ENHANCEMENT PROJECT										
	Network Security / Administrator #	Skill	Skill	1	0	2	2	40	60	100
	Engineering Design Project	Skill	Skill	0	0	2	1	40	60	100
VALUE ADDED COURSE										
TOTAL				**16**	**0**	**08**	**20**	**360**	**540**	**900**

#The course would consist of talks by working professionals from industry, government, academia & research organizations.

VI SEMESTER

Course Code	Course Name	Subject Area	Category	Periods per week			Credits	Scheme of Examination Max. Marks		
				L	T	P		CIA	SEE	Total
THEORY										
	Theory of Computation	PCC	Core	3	0	0	3	40	60	100
	Machine Learning and Neural Computing	PCC	Core	3	0	0	3	40	60	100
	Program Elective – II	PCC	Core	3	0	0	3	40	60	100
	Program Elective – III	PEC	Elective	3	0	0	3	40	60	100
	Open Elective – I	OEC	Elective	3	0	0	3	40	60	100
PRACTICAL										
	Computer System Internals and Linux Laboratory	PCC	Core	0	0	2	1	40	60	100
	Machine Learning and Neural Computing Laboratory	PCC	Core	0	0	2	1	40	60	100
SKILL ENHANCEMENT PROJECT										
	Data Scientist / AI Specialist #	Skill	Skill	1	0	2	2	40	60	100
	Development Project	Skill	Skill	0	0	2	1	40	60	100
VALUE ADDED COURSE										
INTERNSHIP										
TOTAL				**16**	**00**	**08**	**20**	**360**	**540**	**900**

#The course would consist of talks by working professionals from industry, government, academia & research organizations.

VII SEMESTER

Course Code	Course Name	Subject Area	Category	Periods per week			Credits	Scheme of Examination Max. Marks		
				L	T	P		CIA	SEE	Total
THEORY										
	Cyber Physical Systems	HSMC	Foundation	3	0	0	3	40	60	100
	Compiler Construction	PCC	Core	3	0	0	3	40	60	100
	Program Elective - IV	PEC	Elective	3	0	0	3	40	60	100
	Program Elective - V	PEC	Elective	3	0	0	3	40	60	100
	Open Elective - II	OEC	Elective	3	0	0	3	40	60	100
PRACTICAL										
	Computing Things Laboratory	PCC	Core	0	0	2	1	40	60	100
	Security Protocols Laboratory	PCC	Core	0	0	2	1	40	60	100
PROJECT WORK										
	Project Work (Phase - I)	PROJ	Project	0	0	6	3	40	60	100
MANDATORY COURSE										
	Essence of Indian Traditional Knowledge	MC-2	MC	**Ref: Academic Regulations BT-23**						
TOTAL				**15**	**00**	**10**	**20**	**320**	**480**	**800**

VIII SEMESTER

Course Code	Course Name	Subject Area	Category	Periods per week			Credits	Scheme of Examination Max. Marks		
				L	T	P		CIA	SEE	Total
THEORY										
	Managerial Economics and Financial Analysis	BSC	Foundation	3	0	0	3	40	60	100
	Program Elective - VI	PEC	Elective	3	0	0	3	40	60	100
	Open Elective - III	OEC	Elective	3	0	0	3	40	60	100
PROJECT WORK										
	Project Work (Phase - II)	PCC	Project	0	0	22	11	40	60	100
TOTAL				**09**	**00**	**22**	**20**	**160**	**240**	**400**

ELECTIVE COURSES

PROGRAM ELECTIVE COURSES (PEC)

Course Code	Name of the Course	Prerequisites	Preferred Semester	Credits
	Programming Language Paradigms	Object Oriented Programming	V	3
	Security Threats and Modelling	Computer Networks	V	3
	Advanced Computer Architecture	Computer Architecture and Operating Systems	V	3
	Computer Vision	Computer Architecture and Operating Systems	V	3
	Software Project Management	Object Oriented Software Engineering	V	3
	System Analysis Design	Object Oriented Software Engineering	VI	3
	Security Coding	Computer Networks	VI	3
	Parrallel Programming	Programming Language Paradigms	VI	3
	Malware Analysis and Reverse Engineering	Informatio Security and Management	VI	3
	Software Testing Methodoligies	Object Oriented Software Engineering	VI	3
	Mobile Computing	Computer Networks	VI	3
	IoT Security and Attatcks	Computer Architecture and Operating Systems	VI	3
	Social, Text, and Media Analytics	Data Mining	VI	3
	Software Architecture and Design Patterns	Object Oriented Programming	VI	3
	Agile Development and Scrum Practices	Object Oriented Software Engineering	VI	3
	Wireless Sensors Networks	Computer Networks	VII	3
	High-Performance computing	Computer Architecture and Operating Systems	VII	3
	Augmented Reality and Virtual Reality	Computer Vision	VII	3
	Game Develpment	Web Application Development	VII	3
	Business Intelligence	Cloud Application Development	VII	3
	Cyber Crime and Digital Forensics	Informatio Security and Management	VII	3
	Fog Computing	Computer Networks	VII	3
	Advanced Algorithms	Problem Solving	VII	3
	Cyber Security	Object Oriented Software Engineering	VII	3
	Natural Language Processing	Artificial Intelligence	VII	3
	Human Computer Interaction (UI & UX)	Scripting Languages	VIII	3
	Blockchain Technologies	Computer Networks	VIII	3
	Quantum Computing	High-Performance computing	VIII	3
	Digital Visualizations	Probability and Statistics	VIII	3
	Deep Learning	Machine Learning Algorithms	VIII	3

OPEN ELECTIVE COURSES (OEC)

The courses listed below are offered by the Department of Computer Science and Engineering for students of other departments.

Course Code	Course Name	Credits
	Cyber Laws and Security	3
	Intelliectural Property Rights and Management	3
	Bio-Informatics	3
	Ethical Hacking	3
	Enterprise Computing	3
	E-Commerce	3

VALUE-ADDED COURSES

Objective:
Value added courses are provided to equip the students with knowledge and skills outside of the curriculum or to meet any specific requirements of the industry. The following are the Value-Added Courses provided to students by various departments in our institution.

ANY FOUR FROM THE GIVEN BELOW THROUGH IARE ELRV – AKANKSHA / CERTIFICATE - SWAYAM, e-PG pathshala, NPTEL etc..

1. Data Scalability and Distribution (Amazon Web Services, Microsoft Azure, Google Cloud Platform etc.
2. Software Developer (Restful webservices / Microservices, Rust programming, MEAN, MERN, MEVN)
3. Data Science (Data visualization, Data wrangling, Bigdata Technologies, Business Intelligence etc..)
4. Operating Systems (IBM I, Mac OS, Linux, Haiku etc.)
5. Debugging
6. Testing (Selenium, TestNG)
7. Cyber Security (Network Security, Threat Intelligence and Analysis / Risk Assessment and Management
8. Software Architect
9. Blockchain Technology

COURSE CONTENT

MATRICES AND CALCULUS								
I Semester: AE / ME / CE / ECE / EEE / CSE / CSE (AI & ML) / CSE (DS) / CSE (CS) / IT								
Course Code	**Category**	**Hours/Week**			**Credits**	**Maximum Marks**		
		L	**T**	**P**	**C**	**CIA**	**SEE**	**Total**
AHSD02	**Foundation**	3	1	-	4	40	60	100
Contact Classes: 48	**Tutorial Classes: 16**	**Practical Classes: Nil**				**Total Classes: 64**		
Prerequisite: Basic Principles of Algebra and Calculus								

I. COURSE OVERVIEW:

This course Matrices and Calculus is a foundation course of mathematics for all engineering branches. The concepts of Matrices, Eigen Values, Eigen Vectors, Functions of Single and Several Variables, Fourier Series and Multiple Integrals. This course is applicable for simulations, colour imaging process, finding optimal solutions in all fields of industries.

II. COURSE OBJECTIVES:

The students will try to learn:

I The concept of the rank of a matrix, solve the system of linear equations, eigen values, eigen vectors.

II The geometrical approach to the mean value theorems and their application to the mathematical problems.

III The Fourier series expansion in standard intervals as well as arbitrary intervals.

IV The evaluation of multiple integrals and their applications.

III. COURSE OUTCOMES:

At the end of the course students should be able to:

CO 1 Determine the rank and solutions of linear equations with elementary operations.

CO 2 Utilize the Eigen values, Eigen vectors for developing spectral matrices.

CO 3 Make use of Cayley-Hamilton theorem for finding powers of the matrix.

CO 4 Interpret the maxima and minima of given functions by finding the partial derivates.

CO 5 Apply the Fourier series expansion of periodic functions for analyzing the wave forms.

CO 6 Determine the area of solid bounded regions by using the integral calculus.

IV. COURSE CONTENT:

MODULE - I: MATRICES (09)

Rank of a matrix by echelon form and normal form, inverse of non-singular matrices by Gauss-Jordan method, system of linear equations, solving system of homogeneous and non-homogeneous equations.

MODULE - II: EIGEN VALUES AND EIGEN VECTORS (10)

Eigen values, eigen vectors and their properties (without proof), Cayley-Hamilton theorem (without proof), verification, finding inverse and power of a matrix by Cayley-Hamilton theorem, diagonalization of a matrix.

MODULE - III: FUNCTIONS OF SINGLE and SEVERAL VARIABLES (10)

Mean value theorems Rolle's theorem, Lagrange's theorem, Cauchy's theorem-without proof.

Functions of several variables: Partial differentiation, Jacobian, functional dependence, maxima and minima of

functions of two variables and three variables, method of Lagrange multipliers.

MODULE – IV: FOURIER SERIES (09)

Fourier expansion of periodic function in a given interval of length 2π, Fourier series of even and odd functions, Fourier series in an arbitrary interval, half- range Fourier sine and cosine expansions.

MODULE – V: MULTIPLE INTEGRALS (10)

Evaluation of double integrals (cartesian and polar coordinates), change of order of integration (only cartesian coordinates), evaluation of triple integrals (only cartesian coordinates).

V. TEXT BOOKS:

1. B. S. Grewal, *Higher Engineering Mathematics*, 44/e, Khanna Publishers, 2017.
2. Erwin Kreyszig, *Advanced Engineering Mathematics*, 10/e, John Wiley & Sons, 2011.

VI. REFERENCE BOOKS:

1. R. K. Jain and S. R. K. Iyengar, *Advanced Engineering Mathematics*, 3/ed, Narosa Publications, 5th Edition, 2016.
2. George B. Thomas, Maurice D. Weir and Joel Hass, Thomas, *Calculus*, 13/e, Pearson Publishers, 2013.
3. N.P. Bali and Manish Goyal, *A text book of Engineering Mathematics*, Laxmi Publications, Reprint, 2008.
4. Dean G. Duffy, *Advanced Engineering Mathematics with MATLAB*, CRC Press.
5. Peter O'Neil, *Advanced Engineering Mathematics*, Cengage Learning.
6. B.V. Ramana, *Higher Engineering Mathematics*, McGraw Hill Education.

VII. ELECTRONICS RESOURCES:

1. Engineering Mathematics - I, By Prof. Jitendra Kumar | IIT Kharagpur
   https://onlinecourses.nptel.ac.in/noc23_ma88/preview
2. Advanced Calculus for Engineers, By Prof. Jitendra Kumar, Prof. Somesh Kumar | IIT Kharagpur
   https://onlinecourses.nptel.ac.in/noc23_ma86/preview
3. http://www.efunda.com/math/math_home/math.cfm
4. http://www.ocw.mit.edu/resourcs/#Mathematics
5. http://www.sosmath.com
6. http://www.mathworld.wolfram.com

VIII. MATERIAL ONLINE:

1. Course template
2. Tech-talk topics
3. Assignments
4. Definition and terminology
5. Tutorial question bank
6. Model question paper – I
7. Model question paper – II
8. Lecture notes
9. Early lecture readiness videos (ELRV)
10. Power point presentations

COURSE CONTENT

ENGINEERING CHEMISTRY								
I Semester: CSE / CSE (CS) / CSE (DS) **II Semester:** AE / ME / CE / ECE / EEE / CSE (AI & ML) / IT								
Course Code	**Category**	**Hours / Week**			**Credits**	**Maximum Marks**		
AHSD03	**Foundation**	**L**	**T**	**P**	**C**	**CIA**	**SEE**	**Total**
		3	-	-	3	40	60	100
Contact Classes: 64	**Tutorial Classes: Nil**	**Practical Classes: Nil**				**Total Classes: 64**		
Prerequisite: Basic principles of chemistry								

I. COURSE OVERVIEW:

This course focuses on the fundamental concepts of chemistry and then builds an interface with their industrial
applications. The basic knowledge on chemical bonding and intermolecular forces which together are responsible for determining the properties of materials. The students will be able to analyze water purification processes to avoid industrial interruptions. The course concludes with an overview of involving electron transfer, including their applications in corrosion and energy storage for portable electronic devices. It should cultivate in students to identify chemistry in each piece of finely engineered products used in households and industry.

II. COURSES OBJECTIVES:

The students will try to learn

I. The concepts of electrochemical principles and causes of corrosion in the new developments and breakthroughs efficiently in engineering and technology.
II. The different parameters to remove causes of hardness of water and their reactions towards complexometric method.
III. The properties, separation techniques of natural gas and crude oil along with potential applications in major chemical reactions.
IV. The different types of materials with respect to mechanisms and its significance in industrial applications.

III. COURSE OUTCOMES:

At the end of the course students should be able to:

CO1 Acquire the basic knowledge of electrochemical principles related to corrosion and its control
CO2 Interpret the basic properties of water for its usage in industrial and domestic applications.
CO3 Use complexometry for calculation of hardness of water to avoid industrial problems.
CO4 Extend the applications of polymers based on their degradability and properties.
CO5 Choose the appropriate fuel based on their calorific value for energy efficient processes.
CO6 Predict the knowledge on viability of advanced materials for technological improvements in various sectors.

IV. COURSE CONTENT:

MODULE-I: BATTERIES CHEMISTRY AND CORROSION (10)

Introduction to electrochemical cells: Galvanic cell, electrolytic cell; electrochemical series and its applications; Batteries: classification of batteries, construction, working and applications of Zinc-air battery, Lead-acid battery, Li-ion battery, applications of Li-ion battery to electric vehicles; Corrosion: causes and effects of corrosion, theories of chemical and electrochemical corrosion, mechanism of electrochemical corrosion; Corrosion control methods: cathodic protection, sacrificial anode and impressed current methods; Metallic coatings: Galvanization and tinning, electroplating of Copper.

MODULE-II: WATER AND ITS TREATMENT (09)

Introduction: Hardness of water, causes of hardness; types of hardness, temporary and permanent hardness, expression and units of hardness; estimation of hardness of water by complexometric method; potable water and its specifications, steps involved in the treatment of water, disinfection of water by chlorination and ozonization; external treatment of water; ion-exchange process; desalination of water: reverse osmosis, numerical problems.

MODULE-III: POLYMER TECHNOLOGY (10)

Polymers: classification of polymers; types of polymerization-addition, condensation polymerization with examples. Plastics: thermoplastic and thermosetting plastics; preparation, properties and engineering applications of PVC, Nylon 6,6 and Bakelite.

Biodegradable polymers: polylactic acid and polyvinyl alcohol and their applications. Elastomers: Introduction to natural rubber, vulcanization of natural rubber, preparation, properties and engineering applications of Buna-S and Thiokol rubber.

MODULE–IV: ENERGY SOURCES (09)

Introduction to fuels; classification of fuels; Solid fuels: coal; analysis of coal, proximate and ultimate analysis and their significance; Liquid fuels: petroleum and its refining; Gaseous fuels: composition, characteristics and applications of natural gas, LPG and CNG; Alternative and non-conventional sources of energy: solar, wind and hydropower advantages and disadvantages. Calorific value of fuel: HCV and LCV, Dulongs formula, calculation of air quantity required for complete combustion of fuel, numerical problems.

MODULE–V: ENGINEERING MATERIALS (10)

Nanomaterials: Introduction, preparation of nanoparticles by sol-gel method, chemical reduction method
and applications of nanomaterials. Smart materials and their engineering applications: shape memory materials, Poly L-Lactic acid. Thermoresponse materials: Polyacryl amides, Poly vinyl amides.
Cement: composition of Portland cement, setting and hardening of cement.

Lubricants: characteristics of a good lubricant, mechanism of lubrication, thick film, thin film and extreme
pressure lubrication; properties of lubricants: viscosity, flash and fire point, cloud and pour point.

V. TEXT BOOKS:

1. JAIN &JAIN, P.C. Jain, Monika Jain, *Engineering Chemistry* , Dhanpat Rai publishing Company (P) limited, 17th edition, 2022.

VI. REFERENCE BOOKS:

1. Shashi Chawla, *Text Book of Engineering Chemistry*, Dhanat Rai and Company (P) Limited, 1st Edition, 2017.
2. Jayashree Anireddy, *Textbook of Engineering chemistry*, Wiley Publications, 2023
3. S.S.Dara, *Text of Engineering Chemistry*, S.Chand & Co, New Delhi, 12th edition, 2018.
4. Nitin K Puri**,** *Nanomaterials Synthesis Properties and Applications***,** I K international publishing house pvt Ltd,**1st edition** 2021**.**

VII. ELECTRONICS RESOURCES:

1. Engineering chemistry (NPTEL Web-book), by B. L. Tembe, Kamaluddin and M. S.Krishnan.http://www.cdeep.iitb.ac.in/webpage_data/nptel/Core%20Science/Engineering%20Chemistry%201/About- Faculty.html
2. https://books.google.co.in/books?id=R1JtyILNIsAC&pg=PR3&source=gbs_selected_pages&cad=3#v=onepage&q&f=false
3. https://books.google.co.in/books?id=eQTLCgAAQBAJ&pg=SA1PA53&source=gbs_selected_pages&cad=3#v=onepage&q&f=false

VIII. MATERIALS ONLINE

1. Course Template
2. Tutorial Question Bank
3. Tech talk Topics
4. Assignments
5. Definition and Terminology
6. Model Question Paper – I
7. Model Question Paper - II
8. Lecture Notes
9. Early Lecture Readiness Videos
10. Power point presentation

COURSE CONTENT

APPLIED PHYSICS								
I Semester: CSE / CSE (CS) / CSE (DS) **II Semester:** AE / ME / CE / ECE / EEE / CSE (AI & ML) / IT								
Course Code	**Category**	**Hours / Week**			**Credits**	**Maximum Marks**		
AHSD07	**Foundation**	**L**	**T**	**P**	**C**	**CIA**	**SEE**	**Total**
		3	-	-	3	40	60	100
Contact Classes: 48	**Tutorial Classes: Nil**	**Practical Classes: Nil**				**Total Classes: 48**		
Prerequisite: Basic principles of physics								

I. COURSE OVERVIEW:

The aim of this course is to enhance understanding of fundamental knowledge in physics needed for the future technological advances. The framework prepares students to engage in scientific questioning and extend thinking to investigations. The concepts cover current topics in the fields of solid state physics, modern physics, superconductors and nanotechnology. This knowledge helps to develop the ability to apply the principles in many technological sectors such as nanotechnology, optical fiber communication, quantum technology etc.

II. COURSES OBJECTIVES:

The students will try to learn

V. Fundamental concepts needed to explain a crystal structure in terms of atom positions, unit cells, and crystal symmetry.
VI. Basic formulations in wave mechanics for the evolution of energy levels and quantization of energies for a particle in a potential box with the help of mathematical description.
VII. The metrics of optoelectronic components, lasers, optical fiber communication and be able to incorporate them into systems for optimal performance.
VIII. The appropriate magnetic, superconducting and nanomaterials required for various engineering applications.

III. COURSE OUTCOMES:

At the end of the course students should be able to:

CO 1 Use the general rules of indexing of directions and planes in lattices to identify the crystal systems and the Bravais lattices.
CO 2 Use the concepts of dual nature of matter and Schrodinger wave equation to a particle enclosed in simple systems.
CO 3 Analyze the concepts of laser with normal light in terms of mechanism for applications in different fields and scientific practices.
CO 4 Strengthen the knowledge on functionality of components in optical fiber communication system by using the basics of signal propagation, attenuation and dispersion.
CO 5 Gain deeper understanding on properties of magnetic and superconducting materials suitable for engineering applications.
CO 6 Review the principle factors, fabrication, characterization techniques and the applications of nanomaterials.

IV. COURSE CONTENT:

MODULE - I: CRYSTAL STRUCTURES (10)

Introduction, space lattice, basis, unit cell, lattice parameter, Bravais lattices, crystal systems, structure and packing fractions of simple cubic, body centered cubic, face centered cubic crystals, directions and planes in crystals, Miller indices, separation between successive [h k l] planes.

MODULE –II: QUANTUM PHYSICS (09)

Waves and particles, de Broglie hypothesis, matter waves, Davisson and Germer's experiment, Schrödinger's time independent wave equation, physical significance of the wave function, infinite square well potential.

MODULE –III: LASERS AND FIBER OPTICS (10)

Characteristics of lasers, spontaneous and stimulated emission of radiation, population inversion, lasing action, Ruby laser, He-Ne laser, applications of lasers.

Principle and construction of an optical fiber, acceptance angle, numerical aperture, types of optical fibers

(Single mode, multimode, step index, graded index), optical fiber communication system with block diagram, applications of optical fibers.

MODULE –IV: MAGNETIC AND SUPERCONDUCTING PROPERTIES (10)

Permeability, field intensity, magnetic field induction, magnetization, magnetic susceptibility, origin of magnetic moment, Bohr magneton, classification of dia, para and ferro magnetic materials on the basis of magnetic moment, Hysteresis curve.

Superconductivity, general properties, Meissner effect, effect of magnetic field, type-I & type-II superconductors, BCS theory, applications of superconductors.

MODULE –V: NANOTECHNOLOGY (09)

Nanoscale, quantum confinement, surface to volume ratio, bottom-up fabrication: Sol-gel, precipitation, combustion methods, top-down fabrication: Ball milling, physical vapor deposition, chemical vapor deposition, characterization techniques: X-ray diffraction, transmission electron microscopy, applications of nanomaterials.

V. TEXT BOOKS:

2. Arthur Beiser, Shobhit Mahajan and Rai Choudhary, *Concepts of Modern Physics*, Tata McGraw Hill, 7th Edition, 2017.

VI. REFERENCE BOOKS:

2. H J Callister, *A Textbook of Materials Science and Engineering,* Wiley Eastern Edition, 8th Edition, 2013.
3. Halliday, Resnick and Walker, *Fundamentals of Physics,* John Wiley &Sons,11th Edition, 2018.
4. Charles Kittel, *Introduction to Solid State Physics,* Wiley Eastern, 2019.
5. S.L. Gupta and V. Kumar, *Elementary Solid State Physics,* Pragathi Prakashan, 2019.
6. K K Chattopadhyay and A N Banerjee, *Introduction to Nanoscience and Nanotechnology,* Prentice Hall India, 2nd Edition, 2011.

VII. ELECTRONICS RESOURCES:

4. NPTEL :: Physics - NOC:Quantum Mechanics I
5. NPTEL :: Physics - NOC:Introduction to Solid State Physics
6. NPTEL :: Physics - NOC:Solid State Physics
7. https://nptel.ac.in/courses/104104085
8. NPTEL :: Metallurgy and Material Science - NOC: Nanotechnology, Science and Applications

VIII. MATERIALS ONLINE

11. Course template
12. Tutorial question bank
13. Definition and terminology
14. Tech-talk topics
15. Assignments
16. Model question paper - I
17. Model question paper - II
18. Lecture notes
19. Early learning readiness videos (ELRV)
20. Power point presentations

COURSE CONTENT

OBJECT ORIENTED PROGRAMMING								
I Semester: AE / ME / CE / ECE / EEE / CSE / CSE (AI & ML) / CSE (DS) / CSE (CS) / IT								
Course Code	**Category**	**Hours / Week**			**Credits**	**Maximum Marks**		
ACSD01	**Foundation**	**L**	**T**	**P**	**C**	**CIA**	**SEE**	**Total**
		3	0	0	3	40	60	100
Contact Classes: 48	**Tutorial Classes: Nil**	**Practical Classes: Nil**				**Total Classes: 48**		
Prerequisites: **There are no prerequisites to take this course.**								

I. COURSE OVERVIEW:

The course provides a solid foundation in object-oriented programming concepts in using them. It includes concepts object-oriented concepts such as information hiding, encapsulation, and polymorphism. It contrasts the use of inheritance and composition as techniques for software reuse. It provides an understanding of object-oriented design using graphical design notations such as Unified Modeling Language (UML) as well as object design patterns.

II. COURSES OBJECTIVES:

The students will try to learn

I. The fundamental concepts and principles of object-oriented programming in high-level programming languages.
II. The advanced concepts for developing well-structured and efficient programs that involve complex data structures, numerical computations, or domain-specific operations.
III. The design and implementation of features such as inheritance, polymorphism, and encapsulation for tackling complex problems and creating well-organized, modular, and maintainable code.
IV. The usage of input/output interfaces to transmit and receive data to solve real-time computing problems.

III. COURSE OUTCOMES:

At the end of the course, students should be able to:

CO 1 Interpret the features of object-oriented programming languages, comparison, and evaluation of programming languages.
CO 2 Model the real-world scenario using class diagrams and exhibit communication between objects.
CO 3 Estimate the need for special functions for data initialization.
CO 4 Outline the features of object-oriented programming for binding the attributes and behavior of a real-world entity.
CO 5 Use the concepts of streams and files that enable data management to enhance programming skills.
CO 6 Develop contemporary solutions to software design problems using object-oriented principles.

IV. COURSE CONTENT:

MODULE - I: Object-oriented concepts (09)

Objects and legacy systems, procedural versus Object-oriented programming, top-down and bottom-up approaches and their differences, benefits of OOP, applications of OOP, features of OOP.

Abstraction: Layers of abstraction, forms of abstraction, abstraction mechanisms.

MODULE - II: Classes and objects (09)

Classes and objects: Object data, object behaviors, creating objects, attributes, methods, messages, creating class diagrams.

Access specifiers and initialization of class members: Accessing members and methods, access specifiers - public, private, protected, memory allocation. Static members, static methods.

MODULE - III: Special member functions and overloading (09)

Constructors and destructors: Need for constructors and destructors, copy constructors, dynamic constructors, parameterized constructors, destructors, constructors and destructors with static members.

Overloading: Function overloading, constructor overloading, and operator overloading - rules for overloading operators, overloading unary and binary operators, friend functions.

MODULE – IV: Inheritance and polymorphism (09)
Inheritance: types of inheritance, base class, derived class, usage of final, ambiguity in multiple and multipath inheritance, virtual base class, overriding member functions, order of execution of constructors and destructors.

Polymorphism and virtual functions: Virtual functions, pure virtual functions, abstract classes, introduction to polymorphism, static polymorphism, dynamic polymorphism.

MODULE –V: Console I/O and working with files (09)
Console I/O: Concept of streams, hierarchy of console stream classes, unformatted I/O operations, managing output with manipulators.

Working with files: Opening, reading, writing, appending, processing, and closing different types of files, command line arguments**.**

V. TEXTBOOKS:

1. Matt Weisfeld, *The Object-Oriented Thought Process*, Addison Wesley Object Technology Series, 4th Edition, 2013.

VI. REFERENCE BOOKS:

1. Timothy Budd, *Introduction to object-oriented programming*, Addison Wesley Object Technology Series, 3rd Edition, 2002.
2. Gaston C. Hillar, *Learning Object-Oriented Programming*, Packt Publishing, 2015.
3. Kingsley Sage, *Concise Guide to Object-Oriented Programming*, Springer International Publishing, 1st Edition, 2019.
4. Rudolf Pecinovsky**,** *OOP - Learn Object Oriented Thinking and Programming*, Tomas Bruckner, 2013.
5. Grady Booch, *Object-oriented analysis and design with applications*, Addison Wesley Object Technology Series, 3rd Edition, 2007.

VII. ELECTRONICS RESOURCES:

1. https://docs.oracle.com/javase/tutorial/java/concepts/
2. https://www.w3schools.com/cpp/
3. https://www.edx.org/learn/object-oriented-programming/
4. https://www.geeksforgeeks.org/introduction-of-object-oriented-programming/

VIII. MATERIALS ONLINE

1. Course template
2. Tutorial question bank
3. Tech talk topics
4. Open-ended experiments
5. Definitions and terminology
6. Assignments
7. Model question paper – I
8. Model question paper – II
9. Lecture notes
10. PowerPoint presentation
11. E-Learning Readiness Videos (ELRV)

COURSE CONTENT

APPLIED PHYSICS LABORATORY								
I Semester: CSE / CSE (CS) / CSE (DS) **II Semester:** AE / ME / CE / ECE / EEE / CSE (AI & ML) / IT								
Course Code	**Category**	**Hours / Week**			**Credits**	**Maximum Marks**		
		L	**T**	**P**	**C**	**CIA**	**SEE**	**Total**
AHSD09	**Foundation**	-	-	2	1	40	60	100
Contact Classes: Nil	**Tutorial Classes: Nil**	**Practical Classes: 45**				**Total Classes: 45**		
Prerequisite: Basic Principles of Physics								

I. COURSE OVERVIEW:

The aim of the course is to provide hands on experience for experiments in different areas of physics. Students will be able to perform the experiments with interest and an attitude of learning. This laboratory includes experiments involving electromagnetism and optoelectronics. These also develop student's expertise in applying physical concepts to practical problem and apply it for different applications.

II. COURSES OBJECTIVES:

The students will try to learn:

I Familiarize with the lab facilities, equipment, standard operating procedures.

II The different kinds of functional magnetic materials which paves a way for them to use in various technical and engineering applications.

III The analytical techniques and graphical analysis to study the experimental data for optoelectronicdevices.

IV The application of characteristics of lasers and its propagation in optical fiber communication.

III. COURSE OUTCOMES:

After successful completion of the course, students should be able to:

CO1 Identify the type of semiconductor using the principle of Hall effect and also determine the energy gap and resistivity of a semiconductor diode using four probe methods.

CO2 Illustrate principle, working and application of wave propagation and compare the results of frequency with theoretical harmonics and overtones.

CO3 Investigate the energy losses, curie temperature and properties associated with a given Ferro magnetic material.

CO4 Examine launching of light through optical fiber from the concept of light gathering capacity of numerical aperture and determine the divergence of Laser beam

CO5 Graph V-I /L-I characteristics of various optoelectronic devices like Light Emitting diode, Solar cell at different intensities to understand their basic principle of functioning as well as to infer the value of Planck's constant.

CO6 Analyze the variation of magnetic field induction produced at various points along the axis of current carrying coil.

IV. COURSE CONTENT:

1. GETTING STARTED EXCERCISES

1.1 On Errors and Uncertainty in a measurement:

When a number represents a physical measurement, it is never exact because of the limitations of the instrument used or the way it was employed etc. It is essential, therefore, that each experimental result be presented in a way that indicates its reliability. The accuracy of result is important, for example, the calibration of the measuring instruments or systematic errors on the part of whoever is taking the data.

The following table is useful in thinking about these concepts:

Problem	Remedy
Mistakes and blunders	Repeat measurements several times to check yourself
Systematic errors	Use calibrated instruments properly and carefully
Random errors	Treat data statistically and report on the average magnitude of errors

1.2 Making a good graph:

- Keep your axes straight: If you need to plot "A vs B", or "A as a function of B", then A is on the vertical axis and B is on the horizontal axis.
- The crucial part is choosing the range and scale for each axis. The range must be just large enough to accommodate all data and small enough that the scale is readable.
- The scale should be spread out enough so that data take up most of the graph area and labeled so that plotting (and reading) is easy. Where appropriate, error bars should be included to indicate the uncertainty in measurements.
- When a line is drawn, it should be a smooth one that best fits data. In general, there should be as many points on one side of the line as on the other. If data is taken properly, the line should pass inside of the error bars for each point.
- If graph shows that one quantity is proportional to another, it should be a straight line that starts at the origin and passes through the plotted data with as many points on one side as the other.
- If the slope of the line is to be found, choose two points on the line that are as far apart as possible. This will minimize the error that is introduced in reading the value of those points.
- The slope is the difference between the vertical values of those points divided by the difference in the horizontal values of those points.

1.3 Data recording and worksheets

- Write the work sheets for the allotted experiment and keep them ready before the beginning of each lab.
- Perform the experiment and record the observations in the worksheets.
- Analyze the results and get the work sheets evaluated by the faculty.
- Upload the evaluated reports online from CMS LOGIN within the stipulated time.

2. HALL EFFECT (LORENTZ FORCE)

2.1 Study the phenomenon of Hall effect and determine the charge carrier density and Hall coefficient of a given sample.

2.2 Hint whether the given semiconductor is p - type or n - type using the principle of Hall Effect.

ENERGY GAP OF A SEMICONDUCTOR DIODE

2.3 Determination of energy gap of a given semiconductor diode by measuring the variation of current as a function of temperature.

2.4 Try to find the Fermi level of the given semiconductor

3. RESISTIVITY – FOUR PROBE METHOD

3.1 Determination of the resistivity by forcing current through two outer probes

3.2 Formulate the reading of voltage across the two inner probes of semiconductor by four probe method.

4. MELDE'E EXPERIMENT

4.1 Determination of frequency of a given tuning fork in longitudinal wave propagation.

4.2 Try to establish the transverse mode of wave propagation by understanding the theoretical harmonics and overtones.

5. B-H CURVE WITH CRO

5.1 Evaluate the energy loss per unit volume of a given magnetic material per cycle by tracing the hysteresis loop (B-H curve).

5.2 Observe the hysteresis loss of ferro magnetic materials.

6. MAGNETIC MATERIAL

6.1 Determine the curie temperature (Tc) of a ferromagnetic material.

6.2 Evaluate the relative permeability (μ_r) of a ferromagnetic material.

7. OPTICAL FIBER

7.1 Determine the numerical aperture of a given optical fiber.

7.2 Calculate the acceptance angle of a given optical fiber.

8. LASER DIVERGENCE

8.1 Determination of the beam divergence of the given laser beam.

8.2 Try to estimate the laser output

SOLAR CELL

8.3 Studying the characteristics of solar cell at different intensities

8.4 Try to get the maximum workable power.

9. LIGHT EMITTING DIODE

9.1 Studying V-I characteristics of LED in forward bias for different LEDs.

9.2 Measure the threshold voltage and forward resistance, and try for the dynamic Resistance

PLANCK'S CONSTANT

9.3 Determination of Planck's constant by measuring threshold voltage of given LED.

9.4 Draw the L -I characteristics of the given LED.

10. STEWART GEE'S APPARATUS

10.1 Study the magnetic field along the axis of current carrying coil – Stewart and Gee's method.

10.2 Estimate the magnetic lines of force.

11. BIASING OF DIODE

11.1 Study the forward bias of LED

11.2 Study the reverse bias of Photo diode

V. TEXT BOOKS:

1. Laboratory Experiments in College Physics", C.H. Bernard and C.D. Epp, John Wiely and Sons, Inc., New York, 1995.

VI. REFERENCE BOOKS:

1. C. L. Arora, "Practical Physics", S. Chand & Co., New Delhi, 3rd Edition, 2012.
2. Vijay Kumar, Dr. T Radhakrishna, "Practical Physics for Engineering Students", SM Enterprises, 2nd Edition, 2014.
3. Dr. Rizwana, "Engineering Physics Manual", Spectrum Techno Press, 2018.

VII. ELECTRONICS RESOURCES:

1. https://nptel.ac.in/translation
2. https://nptel.ac.in/courses/115105120
3. NPTEL:: courses-Sem 1 and 2 - Engineering Physics and Applied Physics I
4. Experimental Physics I - Course (nptel.ac.in)
5. NPTEL:: Physics - Waves and Oscillations

VIII. MATERIALS ONLINE:

1. Course template
2. Lab manual

COURSE CONTENT

OBJECT ORIENTED PROGRAMMING WITH JAVA LABORATORY								
I Semester: AE / ME / CE / ECE / EEE / CSE / CSE (AI & ML) / CSE (DS) / CSE (CS) / IT								
Course Code	**Category**	**Hours / Week**			**Credits**	**Maximum Marks**		
ACSD02	**Foundation**	**L**	**T**	**P**	**C**	**CIA**	**SEE**	**Total**
		0	1	2	2	40	60	100
Contact Classes: 15	**Tutorial Classes: NIL**	**Practical Classes: 30**				**Total Classes: 45**		
Prerequisite: There are no prerequisites to take this course.								

I. COURSE OVERVIEW:

This course provides a solid foundation in object-oriented programming concepts and hands-on experience in using them. It introduces the concepts of abstraction and reusable code design via the object-oriented paradigm. Through a series of examples and exercises students gain coding skills and develop an understanding of professional programming practices. Mastering Java facilitate the learning of other technologies.

II. COURSES OBJECTIVES:

The students will try to learn

I. The strong foundation with the Java Virtual Machine, its concepts and features.
II. The systematic understanding of key aspects of the Java Class Library
III. The usage of a modern IDE with an object oriented programming language to develop programs.

III. COURSE OUTCOMES:

At the end of the course students should be able to:

CO 1 Develop non-trivial programs in an modern programming language.

CO 2 Apply the principles of selection and iteration.

CO 3 Appreciate uses of modular programming concepts for handling complex problems.

CO 4 Recognize and apply principle features of object-oriented design such as abstraction and encapsulation.

CO 5 Design classes with a view of flexibility and reusability.

CO 6 Code, test and evaluate small use cases to conform to a specification.

IV. COURE CONTENT:

EXERCISES FOR OBJECT ORIENTED PROGRAMMING WITH JAVA LABORATORY

Note: Students are encouraged to bring their own laptops for laboratory practice sessions.

1. Getting Started Exercises

1.1 HelloWorld

1. Install JDK on your machine.
2. Write a Hello-world program using JDK and a source-code editor, such as:
   - For All Platforms: Sublime Text, Atom
   - For Windows: TextPad, NotePad++
   - For macOS: jEdit, gedit
   - For Ubuntu: gedit
3. Do ALL the exercises.

1.2 Writing Good Programs

The only way to learn programming is program, program and program. Learning programming is like learning cycling, swimming or any other sports. You can't learn by watching or reading books. Start to program immediately. On the other hands, to improve your programming, you need to read many books and study how the masters program.

It is easy to write programs that work. It is much harder to write programs that not only work but also easy to maintain and understood by others – I call these good programs. In the real world, writing program is not meaningful. You have to write good programs, so that others can understand and maintain your programs.

Pay particular attention to:

1. Coding Style:
   - Read "Java Code Convention" (@ https://www.oracle.com/technetwork/java/codeconventions-150003.pdf or google "Java Code Convention").
   - Follow the Java Naming Conventions for variables, methods, and classes STRICTLY. Use CamelCase for names. Variable and method names begin with lowercase, while class names begin with uppercase. Use nouns for variables (e.g., radius) and class names (e.g., Circle). Use verbs for methods (e.g., getArea(), isEmpty()).
   - **Use Meaningful Names**: Do not use names like a, b, c, d, x, x1, x2, and x1688 - they are meaningless. Avoid single-alphabet names like i, j, k. They are easy to type, but usually meaningless. Use single-alphabet names only when their meaning is clear, e.g., x, y, z for co-ordinates and i for array index. Use meaningful names like row and col (instead of x and y, i and j, x1 and x2), numStudents (not n), maxGrade, size (not n), and upperbound (not n again). Differentiate between singular and plural nouns (e.g., use books for an array of books, and book for each item).
   - Use consistent indentation and coding style. Many IDEs (such as Eclipse/NetBeans) can re-format your source codes with a single click.
2. Program Documentation: Comment! Comment! and more Comment to explain your code to other people and to yourself three days later.

1.3 Check Pass Fail (if-else)

Write a program called **CheckPassFail** which prints "PASS" if the int variable "mark" is more than or equal to 50; or prints "FAIL" otherwise. The program shall always print "DONE" before exiting.

Hints

Use >= for greater than or equal to comparison.

```
/* Trying if-else statement.
 */
public class CheckPassFail {  // Save as "CheckPassFail.java"
   public static void main(String[] args) {  // Program entry point
```

```
    int mark = 49;   // Set the value of "mark" here!
    System.out.println("The mark is " + mark);

    // if-else statement
    if ( ...... ) {
      System.out.println( ...... );
    } else {
      System.out.println( ...... );
    }
    System.out.println( ...... );
  }
}
```

Try

mark = 0, 49, 50, 51, 100 and verify your results.

Take note of the source-code **indentation**!!! Whenever you open a block with '{', indent all the statements inside the block by 3 (or 4 spaces). When the block ends, un-indent the closing '}' to align with the opening statement.

1.4 CheckOddEven (if-else)

Write a program called **CheckOddEven** which prints "Odd Number" if the int variable "number" is odd, or "Even Number" otherwise. The program shall always print "bye!" before exiting.

Hints

n is an even number if (n % 2) is 0; otherwise, it is an odd number. Use == for comparison, e.g., (n % 2) == 0.

```
/**
 * Trying if-else statement and modulus (%) operator.
 */
public class CheckOddEven {   // Save as "CheckOddEven.java"
  public static void main(String[] args) {  // Program entry point
    int number = 49;       // Set the value of "number" here!
    System.out.println("The number is " + number);
    if ( ...... ) {
      System.out.println( ...... );   // even number
    } else {
      System.out.println( ...... );   // odd number
    }
    System.out.println( ...... );
  }
}
```

Try

number = 0, 1, 88, 99, -1, -2 and verify your results.

Again, take note of the source-code indentation! Make it a good habit to ident your code properly, for ease of reading your program.

1.5 PrintNumberInWord (nested-if, switch-case)

Write a program called **PrintNumberInWord** which prints "ONE", "TWO",... , "NINE", "OTHER" if the int variable "number" is 1, 2,... , 9, or other, respectively. Use (a) a "nested-if" statement; (b) a "switch-case-default" statement.

Hints

```
/**
 * Trying nested-if and switch-case statements.
 */
```

```
public class PrintNumberInWord {   // Save as "PrintNumberInWord.java"
  public static void main(String[] args) {
    int number = 5;  // Set the value of "number" here!

    // Using nested-if
    if (number == 1) {   // Use == for comparison
      System.out.println( ...... );
    } else if ( ...... ) {
      ......
    } else if ( ...... ) {
      ......
    ......
    ......
    } else {
      ......
    }

    // Using switch-case-default
    switch(number) {
      case 1:
        System.out.println( ...... ); break;  // Don't forget the "break" after each case!
      case 2:
        System.out.println( ...... ); break;
      ......
      ......
      default: System.out.println( ...... );
    }
  }
}
```

Try
number = 0, 1, 2, 3, ..., 9, 10 and verify your results.

1.6 PrintDayInWord (nested-if, switch-case)

Write a program called **PrintDayInWord** which prints "Sunday", "Monday", ... "Saturday" if the int variable "dayNumber" is 0, 1, ..., 6, respectively. Otherwise, it shall print "Not a valid day". Use (a) a "nested-if" statement; (b) a "switch-case-default" statement.

Try

dayNumber = 0, 1, 2, 3, 4, 5, 6, 7 and verify your results.

2. Exercises on Number Systems (for Science/Engineering Students)

To be proficient in programming, you need to be able to operate on these number systems:

1. Decimal (used by human beings for input and output)
2. Binary (used by computer for storage and processing)
3. Hexadecimal (shorthand or compact form for binary)

2.1 Exercises (Number Systems Conversion)

1. Convert the following decimal numbers into binary and hexadecimal numbers:
   a. 108
   b. 4848
   c. 9000

   Convert the following binary numbers into hexadecimal and decimal numbers:

   a. 10000000

b. 101010101010
c. 1000011000

Convert the following hexadecimal numbers into binary and decimal numbers:

a. 1234
b. 80F
c. ABCDE

Convert the following decimal numbers into binary equivalent:

a. 123.456D
b. 19.25D

2.2 Exercise (Integer Representation)

1. What are the ranges of 8-bit, 16-bit, 32-bit and 64-bit integer, in "unsigned" and "signed" representation?
2. Give the value of 88, 0, 1, 127, and 255 in 8-bit unsigned representation.
3. Give the value of +88, -88 , -1, 0, +1, -128, and +127 in 8-bit 2's complement signed representation.
4. Give the value of +88, -88 , -1, 0, +1, -127, and +127 in 8-bit sign-magnitude representation.
5. Give the value of +88, -88 , -1, 0, +1, -127 and +127 in 8-bit 1's complement representation.

2.3 Exercises (Floating-point Numbers)

1. Compute the largest and smallest positive numbers that can be represented in the 32-bit normalized form.
2. Compute the largest and smallest negative numbers can be represented in the 32-bit normalized form.
3. Repeat (1) for the 32-bit denormalized form.
4. Repeat (2) for the 32-bit denormalized form.

Hints:

1. Largest positive number: S=0, E=1111 1110 (254), F=111 1111 1111 1111 1111 1111. Smallest positive number: S=0, E=0000 00001 (1), F=000 0000 0000 0000 0000 0000.
2. Same as above, but S=1.
3. Largest positive number: S=0, E=0, F=111 1111 1111 1111 1111 1111. Smallest positive number: S=0, E=0, F=000 0000 0000 0000 0000 0001.
4. Same as above, but S=1.

2.4 Exercises (Data Representation)

For the following 16-bit codes:

```
0000 0000 0010 1010;
1000 0000 0010 1010;
```

Give their values, if they are representing:

1. a 16-bit unsigned integer;
2. a 16-bit signed integer;
3. two 8-bit unsigned integers;
4. two 8-bit signed integers;
5. a 16-bit Unicode characters;
6. two 8-bit ISO-8859-1 characters.

3. Exercises on Decision and Loop

3.1 SumAverageRunningInt (Decision & Loop)

Write a program called **SumAverageRunningInt** to produce the sum of 1, 2, 3, ..., to 100. Store 1 and 100 in variables lowerbound and upperbound, so that we can change their values easily. Also compute and display the average.

The output shall look like:

```
The sum of 1 to 100 is 5050
The average is 50.5
```

Hints

```
/**
 * Compute the sum and average of running integers from a lowerbound to an upperbound using loop.
 */
public class SumAverageRunningInt {   // Save as "SumAverageRunningInt.java"
   public static void main (String[] args) {
      // Define variables
      int sum = 0;          // The accumulated sum, init to 0
      double average;       // average in double
      final int LOWERBOUND = 1;
      final int UPPERBOUND = 100;

      // Use a for-loop to sum from lowerbound to upperbound
      for (int number = LOWERBOUND; number <= UPPERBOUND; ++number) {
            // The loop index variable number = 1, 2, 3, ..., 99, 100
         sum += number;     // same as "sum = sum + number"
      }
      // Compute average in double. Beware that int / int produces int!
      ......
      // Print sum and average
      ......
   }
}
```

Try

1. **Modify the program to use a "while-do" loop instead of "for" loop.**

```
int sum = 0;
      int number = LOWERBOUND;        // declare and init loop index variable
      while (number <= UPPERBOUND) {  // test
         sum += number;
         ++number;                    // update
      }
```

2. Modify the program using do-while loop

```
int sum = 0;
      int number = LOWERBOUND;        // declare and init loop index variable
      do {
         sum += number;
         ++number;                    // update
      } while (number <= UPPERBOUND);  // test
```

3. What is the difference between "for" and "while-do" loops? What is the difference between "while-do" and "do-while" loops?
4. Modify the program to sum from 111 to 8899, and compute the average. Introduce an int variable called count to count the numbers in the specified range (to be used in computing the average).
5. Modify the program to find the "sum of the squares" of all the numbers from 1 to 100, i.e. 1*1 + 2*2 + 3*3 + ... + 100*100.
6. Modify the program to produce two sums: sum of odd numbers and sum of even numbers from 1 to 100. Also computer their absolute difference.

3.2 Product1ToN (or Factorial) (Decision & Loop)

Write a program called Product1ToN to compute the product of integers from 1 to 10 (i.e., 1×2×3×...×10), as an int. Take note that It is the same as factorial of N.

Hints

Declare an int variable called product, initialize to 1, to accumulate the product.

```
// Define variables
int product = 1;      // The accumulated product, init to 1
final int LOWERBOUND = 1;
final int UPPERBOUND = 10;
```

Try

1. Compute the product from 1 to 11, 1 to 12, 1 to 13 and 1 to 14. Write down the product obtained and decide if the results are correct.

   HINTS: Factorial of 13 (=6227020800) is outside the range of int [-2147483648, 2147483647]. Take note that computer programs may not produce the correct result even though the code seems correct!
2. Repeat the above, but use long to store the product. Compare the products obtained with int for N=13 and N=14.

   HINTS: With long, you can store factorial of up to 20.

3.3 HarmonicSum (Decision & Loop)

Write a program called **HarmonicSum** to compute the sum of a harmonic series, as shown below, where n=50000. The program shall compute the sum from left-to-right as well as from the right-to-left. Are the two sums the same? Obtain the absolute difference between these two sums and explain the difference. Which sum is more accurate?

$$Harmonic(n) = 1 + \frac{1}{2} + \frac{1}{3} + \cdots + \frac{1}{n}$$

Hints

```
/**
 * Compute the sum of harmonics series from left-to-right and right-to-left.
 */
public class HarmonicSum {   // Save as "HarmonicSum.java"
  public static void main (String[] args) {
    // Define variables
    final int MAX_DENOMINATOR = 50000;  // Use a more meaningful name instead of n
    double sumL2R = 0.0;        // Sum from left-to-right
    double sumR2L = 0.0;        // Sum from right-to-left
    double absDiff;             // Absolute difference between the two sums

    // for-loop for summing from left-to-right
    for (int denominator = 1; denominator <= MAX_DENOMINATOR; ++denominator) {
      // denominator = 1, 2, 3, 4, 5, ..., MAX_DENOMINATOR
      ......
      // Beware that int/int gives int, e.g., 1/2 gives 0.
    }
    System.out.println("The sum from left-to-right is: " + sumL2R);

    // for-loop for summing from right-to-left
    ......

    // Find the absolute difference and display
    if (sumL2R > sumR2L) ......
```

```
    else ......
  }
}
```

3.4 ComputePI (Decision & Loop)

Write a program called **ComputePI** to compute the value of π, using the following series expansion. Use the maximum denominator (MAX_DENOMINATOR) as the terminating condition. Try MAX_DENOMINATOR of 1000, 10000, 100000, 1000000 and compare the PI obtained. Is this series suitable for computing PI? Why?

$$\pi = 4 \times \left(1 - \frac{1}{3} + \frac{1}{5} - \frac{1}{7} + \frac{1}{9} - \frac{1}{11} + \frac{1}{13} - \frac{1}{15} + \cdots\right)$$

Hints

Add to sum if the denominator % 4 is 1, and subtract from sum if it is 3.

```
    double sum = 0.0;
    int MAX_DENOMINATOR = 1000;   // Try 10000, 100000, 1000000
    for (int denominator = 1; denominator <= MAX_DENOMINATOR; denominator += 2) {
        // denominator = 1, 3, 5, 7, ..., MAX_DENOMINATOR
      if (denominator % 4 == 1) {
        sum += ......;
      } else if (denominator % 4 == 3) {
        sum -= ......;
      } else {   // remainder of 0 or 2
        System.out.println("Impossible!!!");
      }
    }
    ......
```

Try

1. Instead of using maximum denominator as the terminating condition, rewrite your program to use the maximum number of terms (MAX_TERM) as the terminating condition.

```
int MAX_TERM = 10000;  // number of terms used in computation
    int sum = 0.0;
    for (int term = 1; term <= MAX_TERM; term++) {
        // term = 1, 2, 3, 4, ..., MAX_TERM
      if (term % 2 == 1) {  // odd term number: add
        sum += 1.0 / (term * 2 - 1);
      } else {            // even term number: subtract
        ......
      }
    }
```

2. JDK maintains the value of π in a built-in double constant called Math.PI (=3.141592653589793). Add a statement to compare the values obtained and the Math.PI, in percents of Math.PI, i.e., (piComputed / Math.PI) * 100.

3.5 CozaLozaWoza (Decision & Loop)

Write a program called **CozaLozaWoza** which prints the numbers 1 to 110, 11 numbers per line. The program shall print "Coza" in place of the numbers which are multiples of 3, "Loza" for multiples of 5, "Woza" for multiples of 7, "CozaLoza" for multiples of 3 and 5, and so on. The output shall look like:

```
1 2 Coza 4 Loza Coza Woza 8 Coza Loza 11
```

```
Coza 13 Woza CozaLoza 16 17 Coza 19 Loza CozaWoza 22
23 Coza Loza 26 Coza Woza 29 CozaLoza 31 32 Coza
......
```

Hints

```
public class CozaLozaWoza {   // Save as "CozaLozaWoza.java"
  public static void main(String[] args) {
    final int LOWERBOUND = 1, UPPERBOUND = 110;
    for (int number = LOWERBOUND; number <= UPPERBOUND; ++number) {
        // number = LOWERBOUND+1, LOWERBOUND+2, ..., UPPERBOUND
      // Print "Coza" if number is divisible by 3
      if ( ...... ) {
        System.out.print("Coza");
      }
      // Print "Loza" if number is divisible by 5
      if ( ...... ) {
        System.out.print(.....);
      }
      // Print "Woza" if number is divisible by 7
      ......
      // Print the number if it is not divisible by 3, 5 and 7 (i.e., it has not been processed above)
      if ( ...... ) {
        ......
      }
      // After processing the number, print a newline if number is divisible by 11;
      // else print a space
      if ( ...... ) {
        System.out.println();  // print newline
      } else {
        System.out.print( ...... );  // print a space
      }
    }
  }
}
```

Notes

1. You cannot use nested-if (if ... else if ... else if ... else) for this problem. It is because the tests are not mutually exclusive. For example, 15 is divisible by both 3 and 5. Nested-if is only applicable if the tests are mutually exclusive.

2. The tests above look messy. A better solution is to use a boolean flag to keep track of whether the number has been processed, as follows:

```
    final int LOWERBOUND = 1, UPPERBOUND = 110;
    boolean printed;
    for (int number = LOWERBOUND; number <= UPPERBOUND; ++number) {
      printed = false;  // init before processing each number
      // Print "Coza" if number is divisible by 3
      if ( ...... ) {
        System.out.print( ...... );
        printed = true;   // processed!
      }
      // Print "Loza" if number is divisible by 5
      if ( ...... ) {
        System.out.print( ..... );
        printed = true;   // processed!
      }
```

```
      // Print "Woza" if number is divisible by 7
      ......
      // Print the number if it has not been processed
      if (!printed) {
        ......
      }
      // After processing the number, print a newline if it is divisible by 11;
      // else, print a space
      ......
    }
```

3.6 Fibonacci (Decision & Loop)

Write a program called **Fibonacci** to print the first 20 Fibonacci numbers F(n), where F(n)=F(n–1)+F(n–2) and F(1)=F(2)=1. Also compute their average. The output shall look like:

```
The first 20 Fibonacci numbers are:
1 1 2 3 5 8 13 21 34 55 89 144 233 377 610 987 1597 2584 4181 6765
The average is 885.5
```

Hints

```
/**
 * Print first 20 Fibonacci numbers and their average
 */
public class Fibonacci {
  public static void main (String[] args) {
    int n = 3;          // The index n for F(n), starting from n=3, as n=1 and n=2 are pre-defined
    int fn;             // F(n) to be computed
    int fnMinus1 = 1;   // F(n-1), init to F(2)
    int fnMinus2 = 1;   // F(n-2), init to F(1)
    int nMax = 20;      // maximum n, inclusive
    int sum = fnMinus1 + fnMinus2;  // Need sum to compute average
    double average;

    System.out.println("The first " + nMax + " Fibonacci numbers are:");
    ......

    while (n <= nMax) {  // n starts from 3
        // n = 3, 4, 5, ..., nMax
      // Compute F(n), print it and add to sum
      ......
      // Increment the index n and shift the numbers for the next iteration
      ++n;
      fnMinus2 = fnMinus1;
      fnMinus1 = fn;
    }

    // Compute and display the average (=sum/nMax).
    // Beware that int/int gives int.
    ......
  }
}
```

Try

1. Tribonacci numbers are a sequence of numbers T(n) similar to Fibonacci numbers, except that a number is formed by adding the three previous numbers, i.e., T(n)=T(n-1)+T(n-2)+T(n-3), T(1) =T(2)=1,

and T(3)=2. Write a program called Tribonacci to produce the first twenty Tribonacci numbers.

3.7 ExtractDigits (Decision & Loop)

Write a program called **ExtractDigits** to extract each digit from an int, in the reverse order. For example, if the int is 15423, the output shall be "3 2 4 5 1", with a space separating the digits.

Hints

The coding pattern for extracting individual digits from an integer n is:

1. Use (n % 10) to extract the last (least-significant) digit.
2. Use n = n / 10 to drop the last (least-significant) digit.
3. Repeat if (n > 0), i.e., more digits to extract.

Take note that n is destroyed in the process. You may need to clone a copy.

```
int n = ...;
while (n > 0) {
   int digit = n % 10;  // Extract the least-significant digit
   // Print this digit
   ......
   n = n / 10;  // Drop the least-significant digit and repeat the loop
}
```

4. Exercises on Input, Decision and Loop

4.1 Add2Integer (Input)

Write a program called Add2Integers that prompts user to enter two integers. The program shall read the two integers as int; compute their sum; and print the result. For example,

```
Enter first integer: 8
Enter second integer: 9
The sum is: 17
```

Hints

```
import java.util.Scanner;   // For keyboard input
/**
 * 1. Prompt user for 2 integers
 * 2. Read inputs as "int"
 * 3. Compute their sum in "int"
 * 4. Print the result
 */
public class Add2Integers {  // Save as "Add2Integers.java"
   public static void main (String[] args) {
      // Declare variables
      int number1, number2, sum;

      // Put up prompting messages and read inputs as "int"
      Scanner in = new Scanner(System.in);  // Scan the keyboard for input
      System.out.print("Enter first integer: ");  // No newline for prompting message
      number1 = in.nextInt();                  // Read next input as "int"
      ......
      in.close();  // Close Scanner

      // Compute sum
      sum = ......

      // Display result
      System.out.println("The sum is: " + sum);   // Print with newline
```

```
  }
}
```

4.2 SumProductMinMax3 (Arithmetic & Min/Max)

Write a program called SumProductMinMax3 that prompts user for three integers. The program shall read the inputs as int; compute the sum, product, minimum and maximum of the three integers; and print the results. For example,

```
Enter 1st integer: 8
Enter 2nd integer: 2
Enter 3rd integer: 9
The sum is: 19
The product is: 144
The min is: 2
The max is: 9
```

Hints

```
// Declare variables
int number1, number2, number3;  // The 3 input integers
int sum, product, min, max;     // To compute these

// Prompt and read inputs as "int"
Scanner in = new Scanner(System.in);  // Scan the keyboard
......
......
in.close();

// Compute sum and product
sum = ......
product = ......

// Compute min
// The "coding pattern" for computing min is:
// 1. Set min to the first item
// 2. Compare current min with the second item and update min if second item is smaller
// 3. Repeat for the next item
min = number1;       // Assume min is the 1st item
if (number2 < min) {  // Check if the 2nd item is smaller than current min
  min = number2;     // Update min if so
}
if (number3 < min) {  // Continue for the next item
  min = number3;
}

// Compute max - similar to min
......

// Print results
......
```

Try

1. Write a program called SumProductMinMax5 that prompts user for five integers. The program shall read the inputs as int; compute the sum, product, minimum and maximum of the five integers; and print the results. Use five int variables: number1, number2, ..., number5 to store the inputs.

4.3 CircleComputation (double & printf())

Write a program called **CircleComputation** that prompts user for the radius of a circle in floating point number. The program shall read the input as double; compute the diameter, circumference, and area of the circle in double; and print the values rounded to 2 decimal places. Use System-provided constant Math.PI for pi. The formulas are:

```
diameter = 2.0 * radius;
area = Math.PI * radius * radius;
circumference = 2.0 * Math.PI * radius;
```

Hints

```
// Declare variables
double radius, diameter, circumference, area;  // inputs and results - all in double
......

// Prompt and read inputs as "double"
System.out.print("Enter the radius: ");
radius = in.nextDouble();  // read input as double

// Compute in "double"
......

// Print results using printf() with the following format specifiers:
//   %.2f for a double with 2 decimal digits
//   %n for a newline
System.out.printf("Diameter is: %.2f%n", diameter);
......
```

Try

1. Write a program called **SphereComputation** that prompts user for the radius of a sphere in floating point number. The program shall read the input as double; compute the volume and surface area of the sphere in double; and print the values rounded to 2 decimal places. The formulas are:

```
surfaceArea = 4 * Math.PI * radius * radius;
volume = 4 /3 * Math.PI * radius * radius * radius;   // But this does not work in programming?! Why?
```

Take note that you cannot name the variable surface area with a space or surface-area with a dash. Java's naming convention is surfaceArea. Other languages recommend surface_area with an underscore.

2. Write a program called **CylinderComputation** that prompts user for the base radius and height of a cylinder in floating point number. The program shall read the inputs as double; compute the base area, surface area, and volume of the cylinder; and print the values rounded to 2 decimal places. The formulas are:

```
baseArea = Math.PI * radius * radius;
surfaceArea = 2.0 * Math.PI * radius + 2.0 * baseArea;
volume = baseArea * height;
```

4.4 Swap2Integers

Write a program called Swap2Integers that prompts user for two integers. The program shall read the inputs as int, save in two variables called number1 and number2; swap the contents of the two variables; and print the results. For examples,

```
Enter first integer: 9
```

```
Enter second integer: -9
After the swap, first integer is: -9, second integer is: 9
```

Hints

To swap the contents of two variables x and y, you need to introduce a temporary storage, say temp, and do: temp ⇐ x; x ⇐ y; y ⇐ temp.

4.5 IncomeTaxCalculator (Decision)

The progressive income tax rate is mandated as follows:

Taxable Income	Rate (%)
First $20,000	0
Next $20,000	10
Next $20,000	20
The remaining	30

For example, suppose that the taxable income is $85000, the income tax payable is $20000*0% + $20000*10% + $20000*20% + $25000*30%.

Write a program called **IncomeTaxCalculator** that reads the taxable income (in int). The program shall calculate the income tax payable (in double); and print the result rounded to 2 decimal places. For examples,

```
Enter the taxable income: $41234
The income tax payable is: $2246.80

Enter the taxable income: $67891
The income tax payable is: $8367.30

Enter the taxable income: $85432
The income tax payable is: $13629.60

Enter the taxable income: $12345
The income tax payable is: $0.00
```

Hints

```
// Declare constants first (variables may use these constants)
// The keyword "final" marked these as constant (i.e., cannot be changed).
// Use uppercase words joined with underscore to name constants
final double TAX_RATE_ABOVE_20K = 0.1;
final double TAX_RATE_ABOVE_40K = 0.2;
final double TAX_RATE_ABOVE_60K = 0.3;

// Declare variables
int taxableIncome;
double taxPayable;
......

// Compute tax payable in "double" using a nested-if to handle 4 cases
if (taxableIncome <= 20000) {        // [0, 20000]
   taxPayable = ......;
} else if (taxableIncome <= 40000) {  // [20001, 40000]
   taxPayable = ......;
} else if (taxableIncome <= 60000) {  // [40001, 60000]
   taxPayable = ......;
} else {                              // [60001, ]
   taxPayable = ......;
}
// Alternatively, you could use the following nested-if conditions
```

```
// but the above follows the table data
//if (taxableIncome > 60000) {          // [60001, ]
//   ......
//} else if (taxableIncome > 40000) {   // [40001, 60000]
//   ......
//} else if (taxableIncome > 20000) {   // [20001, 40000]
//   ......
//} else {                              // [0, 20000]
//   ......
//}

// Print results rounded to 2 decimal places
System.out.printf("The income tax payable is: $%.2f%n", ...);
```

Try

Suppose that a 10% tax rebate is announced for the income tax payable, capped at $1,000, modify your program to handle the tax rebate. For example, suppose that the tax payable is $12,000, the rebate is $1,000, as 10% of $12,000 exceed the cap.

4.6 IncomeTaxCalculatorWithSentinel (Decision & Loop)

Based on the previous exercise, write a program called IncomeTaxCalculatorWithSentinel which shall repeat the calculation until user enter -1. For example,

```
Enter the taxable income (or -1 to end): $41000
The income tax payable is: $2200.00

Enter the taxable income (or -1 to end): $62000
The income tax payable is: $6600.00

Enter the taxable income (or -1 to end): $73123
The income tax payable is: $9936.90

Enter the taxable income (or -1 to end): $84328
The income tax payable is: $13298.40

Enter the taxable income: $-1
bye!
```

The -1 is known as the sentinel value. (Wiki: In programming, a sentinel value, also referred to as a flag value, trip value, rogue value, signal value, or dummy data, is a special value which uses its presence as a condition of termination.)

Hints

The coding pattern for handling input with sentinel value is as follows:

```
// Declare constants first
final int SENTINEL = -1;    // Terminating value for input
......
// Declare variables
int taxableIncome;
double taxPayable;
......

// Read the first input to "seed" the while loop
System.out.print("Enter the taxable income (or -1 to end): $");
taxableIncome = in.nextInt();

while (taxableIncome != SENTINEL) {
   // Compute tax payable
   ......
   // Print result
```

```
      ......

      // Read the next input
      System.out.print("Enter the taxable income (or -1 to end): $");
      taxableIncome = in.nextInt();
        // Repeat the loop body, only if the input is not the SENTINEL value.
        // Take note that you need to repeat these two statements inside/outside the loop!
   }
   System.out.println("bye!");
```

Take note that we repeat the input statements inside and outside the loop. Repeating statements is NOT a good programming practice. This is because it is easy to repeat (Cntl-C/Cntl-V), but hard to maintain and synchronize the repeated statements. In this case, we have no better choices!

4.7 PensionContributionCalculatorWithSentinel (Decision & Loop)

Based on the previous PensionContributionCalculator,
write a program called **PensionContributionCalculatorWithSentinel** which shall repeat the calculations until user enter -1 for the salary. For examples,

```
Enter the monthly salary (or -1 to end): $5123
Enter the age: 21
The employee's contribution is: $1024.60
The employer's contribution is: $870.91
The total contribution is: $1895.51

Enter the monthly salary (or -1 to end): $5123
Enter the age: 64
The employee's contribution is: $384.22
The employer's contribution is: $461.07
The total contribution is: $845.30

Enter the monthly salary (or -1 to end): $-1
bye!
```

Hints

```
   // Read the first input to "seed" the while loop
   System.out.print("Enter the monthly salary (or -1 to end): $");
   salary = in.nextInt();

   while (salary != SENTINEL) {
      // Read the remaining
      System.out.print("Enter the age: ");
      age = in.nextInt();

      ......
      ......

      // Read the next input and repeat
      System.out.print("Enter the monthly salary (or -1 to end): $");
      salary = in.nextInt();
   }
```

4.8 SalesTaxCalculator (Decision & Loop)

A sales tax of 7% is levied on all goods and services consumed. It is also mandatory that all the price tags should include the sales tax. For example, if an item has a price tag of $107, the actual price is $100 and $7 goes to the sales tax.

Write a program using a loop to continuously input the tax-inclusive price (in double); compute the actual price and the sales tax (in double); and print the results rounded to 2 decimal places. The program shall terminate in response to input of -1; and print the total price, total actual price, and total sales tax. For examples,

```
Enter the tax-inclusive price in dollars (or -1 to end): 107
Actual Price is: $100.00, Sales Tax is: $7.00

Enter the tax-inclusive price in dollars (or -1 to end): 214
Actual Price is: $200.00, Sales Tax is: $14.00

Enter the tax-inclusive price in dollars (or -1 to end): 321
Actual Price is: $300.00, Sales Tax is: $21.00

Enter the tax-inclusive price in dollars (or -1 to end): -1
Total Price is: $642.00
Total Actual Price is: $600.00
Total Sales Tax is: $42.00
```

Hints

```
// Declare constants
final double SALES_TAX_RATE = 0.07;
final int SENTINEL = -1;        // Terminating value for input

// Declare variables
double price, actualPrice, salesTax;  // inputs and results
double totalPrice = 0.0, totalActualPrice = 0.0, totalSalesTax = 0.0;  // to accumulate
......

// Read the first input to "seed" the while loop
System.out.print("Enter the tax-inclusive price in dollars (or -1 to end): ");
price =  in.nextDouble();

while (price != SENTINEL) {
   // Compute the tax
   ......
   // Accumulate into the totals
   ......
   // Print results
   ......

   // Read the next input and repeat
   System.out.print("Enter the tax-inclusive price in dollars (or -1 to end): ");
   price =  in.nextDouble();
}
// print totals
......
```

4.9 ReverseInt (Loop with Modulus/Divide)

Write a program that prompts user for a positive integer. The program shall read the input as int; and print the "reverse" of the input integer. For examples,

```
Enter a positive integer: 12345
The reverse is: 54321
```

Hints

Use the following coding pattern which uses a while-loop with repeated modulus/divide operations to extract and drop the last digit of a positive integer.

```
// Declare variables
int inNumber;   // to be input
int inDigit;    // each digit
......

// Extract and drop the "last" digit repeatably using a while-loop with modulus/divide operations
while (inNumber > 0) {
   inDigit = inNumber % 10; // extract the "last" digit
   // Print this digit (which is extracted in reverse order)
   ......
   inNumber /= 10;          // drop "last" digit and repeat
}
......
```

4.10 SumOfDigitsInt (Loop with Modulus/Divide)

Write a program that prompts user for a positive integer. The program shall read the input as int; compute and print the sum of all its digits. For examples,

```
Enter a positive integer: 12345
The sum of all digits is: 15
```

Hints

See "ReverseInt".

4.11 InputValidation (Loop with boolean flag)

Your program often needs to validate the user's inputs, e.g., marks shall be between 0 and 100.

Write a program that prompts user for an integer between 0-10 or 90-100. The program shall read the input as int; and repeat until the user enters a valid input. For examples,

```
Enter a number between 0-10 or 90-100: -1
Invalid input, try again...
Enter a number between 0-10 or 90-100: 50
Invalid input, try again...
Enter a number between 0-10 or 90-100: 101
Invalid input, try again...
Enter a number between 0-10 or 90-100: 95
You have entered: 95
```

Hints

Use the following coding pattern which uses a do-while loop controlled by a boolean flag to do input validation. We use a do-while instead of while-do loop as we need to execute the body to prompt and process the input at least once.

```
// Declare variables
int numberIn;      // to be input
boolean isValid;   // boolean flag to control the loop
......

// Use a do-while loop controlled by a boolean flag
// to repeatably read the input until a valid input is entered
isValid = false;   // default assuming input is not valid
do {
   // Prompt and read input
   ......
```

```
      // Validate input by setting the boolean flag accordingly
      if (numberIn ......) {
        isValid = true;   // exit the loop
      } else {
        System.out.println(......);  // Print error message and repeat
      }
    } while (!isValid);
    ......
```

4.12 AverageWithInputValidation (Loop with boolean flag)

Write a program that prompts user for the mark (between 0-100 in int) of 3 students; computes the average (in double); and prints the result rounded to 2 decimal places. Your program needs to perform input validation. For examples,

```
Enter the mark (0-100) for student 1: 56
Enter the mark (0-100) for student 2: 101
Invalid input, try again...
Enter the mark (0-100) for student 2: -1
Invalid input, try again...
Enter the mark (0-100) for student 2: 99
Enter the mark (0-100) for student 3: 45
The average is: 66.67
```

Hints

```
    // Declare constant
    final int NUM_STUDENTS = 3;

    // Declare variables
    int numberIn;
    boolean isValid;   // boolean flag to control the input validation loop
    int sum = 0;
    double average;
    ......

    for (int studentNo = 1; studentNo <= NUM_STUDENTS; ++studentNo) {
      // Prompt user for mark with input validation
      ......
      isValid = false;   // reset assuming input is not valid
      do {
        ......
      } while (!isValid);

      sum += ......;
    }
    ......
```

5. Exercises on Nested-Loops

5.1 SquarePattern (nested-loop)

Write a program called **SquarePattern** that prompts user for the size (a non-negative integer in int); and prints the following square pattern using two nested for-loops.

```
Enter the size: 5
# # # # #
# # # # #
# # # # #
# # # # #
# # # # #
```

Hints

The code pattern for printing 2D patterns using nested loops is:

```
// Outer loop to print each of the rows
for (int row = 1; row <= size; row++) {  // row = 1, 2, 3, ..., size
   // Inner loop to print each of the columns of a particular row
   for (int col = 1; col <= size; col++) {  // col = 1, 2, 3, ..., size
      System.out.print( ...... );   // Use print() without newline inside the inner loop
      ......
   }
   // Print a newline after printing all the columns
   System.out.println();
}
```

Notes

1. You should name the loop indexes row and col, NOT i and j, or x and y, or a and b, which are meaningless.
2. The row and col could start at 1 (and upto size), or start at 0 (and upto size-1). As computer counts from 0, it is probably more efficient to start from 0. However, since humans counts from 1, it is easier to read if you start from 1.

Try

Rewrite the above program using nested while-do loops.

5.2 CheckerPattern (nested-loop)

Write a program called **CheckerPattern** that prompts user for the size (a non-negative integer in int); and prints the following checkerboard pattern.

```
Enter the size: 7
# # # # # # #
 # # # # # # #
# # # # # # #
 # # # # # # #
# # # # # # #
 # # # # # # #
# # # # # # #
```

Hints

```
// Outer loop to print each of the rows
for (int row = 1; row <= size; row++) {  // row = 1, 2, 3, ..., size
   // Inner loop to print each of the columns of a particular row
   for (int col = 1; col <= size; col++) {  // col = 1, 2, 3, ..., size
      if ((row % 2) == 0) {   // row 2, 4, 6, ...
         ......
      }
      System.out.print( ...... );   // Use print() without newline inside the inner loop
      ......
   }
   // Print a newline after printing all the columns
   System.out.println();
}
```

5.3 TimeTable (nested-loop)

Write a program called **TimeTable** that prompts user for the size (a positive integer in int); and prints the multiplication table as shown:

```
Enter the size: 10
 * |  1  2  3  4  5  6  7  8  9 10
---------------------------------------------
 1 |  1  2  3  4  5  6  7  8  9 10
 2 |  2  4  6  8 10 12 14 16 18 20
 3 |  3  6  9 12 15 18 21 24 27 30
 4 |  4  8 12 16 20 24 28 32 36 40
 5 |  5 10 15 20 25 30 35 40 45 50
 6 |  6 12 18 24 30 36 42 48 54 60
 7 |  7 14 21 28 35 42 49 56 63 70
 8 |  8 16 24 32 40 48 56 64 72 80
 9 |  9 18 27 36 45 54 63 72 81 90
10 | 10 20 30 40 50 60 70 80 90 100
```

Hints

1. Use printf() to format the output, e.g., each cell is %4d.
2. See "Java Basics" article.

5.4 TriangularPattern (nested-loop)

Write 4 programs called **TriangularPatternX** (X = A, B, C, D) that prompts user for the size (a non-negative integer in int); and prints each of the patterns as shown:

```
Enter the size: 8

#            ########   ########           #
##            #######    #######          ##
###            ######     ######         ###
####            #####      #####        ####
#####            ####       ####       #####
######            ###        ###      ######
#######            ##         ##     #######
########            #          #    ########
   (a)            (b)        (c)        (d)
```

Hints

1. On the main diagonal, row = col. On the opposite diagonal, row + col = size + 1, where row and col begin from 1.
2. You need to print the leading blanks, in order to push the # to the right. The trailing blanks are optional, which does not affect the pattern.
3. For pattern (a), if (row >= col) print #. Trailing blanks are optional.
4. For pattern (b), if (row + col <= size + 1) print #. Trailing blanks are optional.
5. For pattern (c), if (row >= col) print #; else print blank. Need to print the leading blanks.
6. For pattern (d), if (row + col >= size + 1) print #; else print blank. Need to print the leading blanks.
7. The coding pattern is:

```
// Outer loop to print each of the rows
   for (int row = 1; row <= size; row++) {  // row = 1, 2, 3, ..., size
     // Inner loop to print each of the columns of a particular row
     for (int col = 1; col <= size; col++) {  // col = 1, 2, 3, ..., size
       if (......) {
          System.out.print("# ");
       } else {
```

```
            System.out.print("  ");  // Need to print the "leading" blanks
          }
        }
        // Print a newline after printing all the columns
        System.out.println();
      }
```

5.5 BoxPattern (nested-loop)

Write 4 programs called **BoxPatternX** (X = A, B, C, D) that prompts user for the size (a non-negative integer in int); and prints the pattern as shown:

```
Enter the size: 8

#######  #######  #######  #######  #######
#     #  #           #    #   #    ##   ##
#     #   #         #     # #     # # # #
#     #    #       #       #     #  #  #
#     #     #     #       # #    # # # #
#     #      #   #       #   #   ##   ##
#######  #######  #######  #######  #######
   (a)      (b)      (c)      (d)      (e)
```

Hints

1. On the main diagonal, row = col. On the opposite diagonal, row + col = size + 1, where row and col begin from 1.
2. For pattern (a), if (row == 1 || row == size || col == 1 || col == size) print #; else print blank. Need to print the intermediate blanks.
3. For pattern (b), if (row == 1 || row == size || row == col) print #; else print blank.

5.6 HillPattern (nested-loop)

Write 3 programs called **HillPatternX** (X = A, B, C, D) that prompts user for the size (a non-negative integer in int); and prints the pattern as shown:

```
Enter the rows: 6

     #         ###########         #         ###########
    ###         #########         ###        #####  #####
   #####         #######         #####       ####   ####
  #######         #####         #######      ###     ###
 #########         ###         #########     ##       ##
###########         #         ###########    #         #
     (a)              (b)          #########    ##       ##
                                  #######      ###     ###
                                   #####       ####   ####
                                    ###       #####  #####
                                     #       ###########
                                    (c)              (d)
```

Hints

For pattern (a):

```
for (int row = 1; ......) {
      // numCol = 2*numRows - 1
      for (int col = 1; ......) {
        if ((row + col >= numRows + 1) && (row >= col - numRows + 1)) {
          ......;
        } else {
```

```
        ......;
      }
    }
    ......;
  }
```

or, use 2 sequential inner loops to print the columns:

```
  for (int row = 1; row <= rows; row++) {
    for (int col = 1; col <= rows; col++) {
      if ((row + col >= rows + 1)) {
        ......
      } else {
        ......
      }
    }
    for (int col = 2; col <= rows; col++) {  // skip col = 1
      if (row >= col) {
        ......
      } else {
        ......
      }
    }
    ......
  }
```

5.7 NumberPattern (nested-loop)

Write 4 programs called **NumberPatternX** (X = A, B, C, D) that prompts user for the size (a non-negative integer in int); and prints the pattern as shown:

```
Enter the size: 8

1               1 2 3 4 5 6 7 8             1     8 7 6 5 4 3 2 1
1 2               1 2 3 4 5 6 7           2 1     7 6 5 4 3 2 1
1 2 3               1 2 3 4 5 6         3 2 1     6 5 4 3 2 1
1 2 3 4               1 2 3 4 5       4 3 2 1     5 4 3 2 1
1 2 3 4 5               1 2 3 4     5 4 3 2 1     4 3 2 1
1 2 3 4 5 6               1 2 3   6 5 4 3 2 1     3 2 1
1 2 3 4 5 6 7               1 2 7 6 5 4 3 2 1     2 1
1 2 3 4 5 6 7 8               1 8 7 6 5 4 3 2 1     1
   (a)             (b)             (c)             (d)
```

6. Magic(Special) Numbers

6.1. Amicable umbers

Two different numbers are said to be so Amicable numbers if each sum of divisors is equal to the other number. Amicalble Numbers are: (220, 284), (1184, 1210), (2620, 2924), (5020, 5564), (6232, 6368). For example,

```
Enter 1st number: 228
Enter 2nd number: 220
The numbers are Amicable Numbers.
```

Hints

```
220 and 284 are Amicable Numbers.

Divisors of 220 = 1, 2, 4, 5, 10, 11, 20, 22, 44, 55, 110

1+2+4+5+10+11+20+22+44+55+110 = 284

Divisors of 284 = 1, 2, 4, 71, 142
1+2+4+71+142 = 220
```

6.2. Armstrong Number

Armstrong number is a positive number if it is equal to the sum of cubes of its digits is called Armstrong number and if its sum is not equal to the number then it's not a Armstrong number. For example,

```
Enter number=145
145 is not an Armstrong Number

Enter number = 153
153 is an Armstrong Number
```

Hints

```
Examples: 153 is Armstrong

(1*1*1)+(5*5*5)+(3*3*3) = 153
```

6.3. Capricorn Number

A number is called Capricorn or Kaprekar number whose square is divided into two parts in any conditions and parts are added, the additions of parts is equal to the number, is called Capricorn or Kaprekar number. For example,

```
Enter a number : 45
45 is a Capricorn/Kaprekar number
Enter a number : 297
297 is a Capricorn/Kaprekar number
Enter a number : 44
44 is not a Capricorn/Kaprekar number
```

Hints

```
Number = 45
(45)2   = 2025

All parts for 2025:
202     + 5   =    207 (not 45)
20      + 25  =    45
2+  025    =    27 (not 45)
```

From the above we can see one combination is equal to number so that 45 is Capricorn or Kaprekar number.

Try

Write a Java program to generate and show all Kaprekar numbers less than 1000.

6.4. Circular Prime

A circular prime is a prime number with the property that the number generated at each intermediate step when

cyclically permuting its digits will be prime. For example, 1193 is a circular prime, since 1931, 9311 and 3119 all are also prime. For example,

```
Enter a number : 137
137 is a Circular Prime
Enter a number : 44
44 is not a Circular Prime
```

6.5. Happy Number

A happy number is a natural number in a given number base that eventually reaches 1 when iterated over the perfect digital invariant function for. Those numbers that do not end in 1 are -unhappy numbers. For example,

```
Enter a number : 31
31 is a Happy number

Enter a number : 32
32 is not a Happy number
```

6.6. Automorphic Number

An Automorphic number is a number whose square "ends" in the same digits as the number itself. For example,

```
Enter a number : 5
5 is a Automorphic Number

Enter a number : 25
25 is a Automorphic Number

Enter a number : 2
2 is not a Automorphic Number
```

Hints

```
5*5 = 25, 6*6 = 36, 25*25 = 625

5,6,25 are automorphic numbers
```

6.7. Disarium Number

A number is called Disarium number if the sum of its power of the positions from left to right is equal to the number. For example,

```
Enter a number : 135
135 is a Disarium Number

Enter a number : 32
32 is not a Disarium Number
```

Hints

$1^1 + 3^2 + 5^3 = 1 + 9 + 125 = 135$

6.8. Magic Number

Magic number is the if the sum of its digits recursively are calculated till a single digit If the single digit is 1 then the number is a magic number. Magic number is very similar with Happy Number. For example,

```
Enter a number : 226
226 is a Magic Number

Enter a number : 32
```

```
32 is not a Magic Number
Enter number = 541
153 is a Magic Number
```

Hints

226 is said to be a magic number

2+2+6=10 sum of digits is 10 then again 1+0=1 now we get a single digit number is 1.if we single digit number will now 1 them it would not a magic number.

6.9. Neon Number

A neon number is a number where the sum of digits of square of the number is equal to the number. For example if the input number is 9, its square is 9*9 = 81 and sum of the digits is 9. i.e. 9 is a neon number. For example,

```
Enter a number: 9
9 is a Neon Number

Enter a number: 8
8 is not a Neon Number
```

6.10. Palindromic Number

A palindromic number is a number that remains the same when its digits are reversed. For example,

```
Enter a number : 16461
16461 is a Palendromic Number

Enter a number : 1234
1234 is not a Plaindromic Number
```

6.11. Perfect Number

A perfect number is a positive integer that is equal to the sum of its positive divisors, excluding the number itself. For instance, 6 has divisors 1, 2 and 3, and 1 + 2 + 3 = 6, so 6 is a perfect number. For example,

```
Enter a number : 6
6 is a Perfect Number

Enter a number : 3
3 is not a Perfect Number
```

6.12. Special Number

A number is said to be special number when the sum of factorial of its digits is equal to the number itself. Example- 145 is a Special Number as 1!+4!+5!=145. For example,

```
Enter a number : 145
145 is a Special Number

Enter a number : 23
23 is not a Special Number
```

6.13. Spy Number

A spy number is a number where the sum of its digits equals the product of its digits. For example, 1124 is a spy number, the sum of its digits is 1+1+2+4=8 and the product of its digits is 1*1*2*4=8. For example,

```
Enter a number : 1124
1124 is a Spy Number

Enter a number : 12
```

```
12 is not a Spy Number
```

6.14. Ugly Number

A number is said to be an Ugly number if positive numbers whose prime factors only include 2, 3, 5. For example, 6(2×3), 8(2x2x2), 15(3×5) are ugly numbers while 14(2×7) is not ugly since it includes another prime factor 7. Note that 1 is typically treated as an ugly number. For example,

```
Enter a number : 6
6 is an Ugly Number

Enter a number : 14
14 is not an Ugly Number
```

7. Exercises on String and char Operations

7.1 ReverseString (String & char)

Write a program called **ReverseString**, which prompts user for a String, and prints the reverse of the String by extracting and processing each character. The output shall look like:

```
Enter a String: abcdef
The reverse of the String "abcdef" is "fedcba".
```

Hints

For a String called inStr, you can use inStr.length() to get the length of the String; and inStr.charAt(idx) to retrieve the char at the idx position, where idx begins at 0, up to instr.length() - 1.

```
// Define variables
String inStr;       // input String
int inStrLen;       // length of the input String
......

// Prompt and read input as "String"
System.out.print("Enter a String: ");
inStr = in.next();   // use next() to read a String
inStrLen = inStr.length();

// Use inStr.charAt(index) in a loop to extract each character
// The String's index begins at 0 from the left.
// Process the String from the right
for (int charIdx = inStrLen - 1; charIdx >= 0; --charIdx) {
    // charIdx = inStrLen-1, inStrLen-2, ... ,0
  ......
}
```

7.2 CountVowelsDigits (String & char)

Write a program called **CountVowelsDigits**, which prompts the user for a String, counts the number of vowels (a, e, i, o, u, A, E, I, O, U) and digits (0-9) contained in the string, and prints the counts and the percentages (rounded to 2 decimal places). For example,

```
Enter a String: testing12345
Number of vowels: 2 (16.67%)
Number of digits: 5 (41.67%)
```

Hints

1. To check if a char c is a digit, you can use boolean expression (c >= '0' && c <= '9'); or use built-in boolean function Character.isDigit(c).

2. You could use in.next().toLowerCase() to convert the input String to lowercase to reduce the number of cases.
3. To print a % using printf(), you need to use %%. This is because % is a prefix for format specifier in printf(), e.g., %d and %f.

7.3 PhoneKeyPad (String & char)

On you phone keypad, the alphabets are mapped to digits as follows:

ABC(2), DEF(3), GHI(4), JKL(5), MNO(6), PQRS(7), TUV(8), WXYZ(9).

Write a program called **PhoneKeyPad**, which prompts user for a String (case insensitive), and converts to a sequence of keypad digits. Use (a) a nested-if, (b) a switch-case-default.

Hints

1. You can use in.next().toLowerCase() to read a String and convert it to lowercase to reduce your cases.
2. In switch-case, you can handle multiple cases by omitting the break statement, e.g.,

```
switch (inChar) {
  case 'a': case 'b': case 'c':  // No break for 'a' and 'b', fall thru 'c'
    System.out.print(2); break;
  case 'd': case 'e': case 'f':
    ......
  default:
    ......
}
```

7.4 Caesar's Code (String & char)

Caesar's Code is one of the simplest encryption techniques. Each letter in the plaintext is replaced by a letter some fixed number of position (n) down the alphabet cyclically. In this exercise, we shall pick n=3. That is, 'A' is replaced by 'D', 'B' by 'E', 'C' by 'F', ..., 'X' by 'A', ..., 'Z' by 'C'.

Write a program called **CaesarCode** to cipher the Caesar's code. The program shall prompt user for a plaintext string consisting of mix-case letters only; compute the ciphertext; and print the ciphertext in uppercase. For example,

```
Enter a plaintext string: Testing
The ciphertext string is: WHVWLQJ
```

Hints

1. Use in.next().toUpperCase() to read an input string and convert it into uppercase to reduce the number of cases.
2. You can use a big nested-if with 26 cases ('A'-'Z'). But it is much better to consider 'A' to 'W' as one case; 'X', 'Y' and 'Z' as 3 separate cases.
3. Take note that char 'A' is represented as Unicode number 65 and char 'D' as 68. However, 'A' + 3 gives 68. This is because char + int is implicitly casted to int + int which returns an int value. To obtain a char value, you need to perform explicit type casting using (char)('A' + 3). Try printing ('A' + 3) with and without type casting.

7.5 Decipher Caesar's Code (String & char)

Write a program called **DecipherCaesarCode** to decipher the Caesar's code described in the previous exercise. The program shall prompts user for a ciphertext string consisting of mix-case letters only; compute the plaintext; and print the plaintext in uppercase. For example,

```
Enter a ciphertext string: wHVwLQJ
```

```
The plaintext string is: TESTING
```

7.6 Exchange Cipher (String & char)

This simple cipher exchanges 'A' and 'Z', 'B' and 'Y', 'C' and 'X', and so on.
Write a program called **ExchangeCipher** that prompts user for a plaintext string consisting of mix-case letters only. You program shall compute the ciphertext; and print the ciphertext in uppercase. For examples,

```
Enter a plaintext string: abcXYZ
The ciphertext string is: ZYXCBA
```

Hints

1. Use in.next().toUpperCase() to read an input string and convert it into uppercase to reduce the number of cases.
2. You can use a big nested-if with 26 cases ('A'-'Z'), or use the following relationship:

```
'A' + 'Z' == 'B' + 'Y' == 'C' + 'X' == ... == plainTextChar + cipherTextChar
Hence, cipherTextChar = 'A' + 'Z' - plainTextChar
```

7.7 TestPalindromicWord and TestPalindromicPhrase (String & char)

A word that reads the same backward as forward is called a palindrome, e.g., "mom", "dad", "racecar", "madam", and "Radar" (case-insensitive).

Write a program called **TestPalindromicWord**, that prompts user for a word and prints ""xxx" is|is not a palindrome".

A phrase that reads the same backward as forward is also called a palindrome, e.g., "Madam, I'm Adam", "A man, a plan, a canal - Panama!" (ignoring punctuation and capitalization).

Modify your program (called **TestPalindromicPhrase**) to check for palindromic phrase. Use in.nextLine() to read a line of input.

Hints

1. **Maintain two indexes, forwardIndex (fIdx) and backwardIndex (bIdx), to scan the phrase forward and backward.**

```
int fIdx = 0, bIdx = strLen - 1;
while (fIdx < bIdx) {
   ......
   ++fIdx;
   --bIdx;
}
// or
for (int fIdx = 0, bIdx = strLen - 1; fIdx < bIdx; ++fIdx, --bIdx) {
   ......
}
```

2. You can check if a char c is a letter either using built-in boolean function Character.isLetter(c); or boolean expression (c >= 'a' && c <= 'z'). Skip the index if it does not contain a letter.

7.8 CheckBinStr (String & char)

The binary number system uses 2 symbols, 0 and 1. Write a program called **CheckBinStr** to verify a binary string. The program shall prompt user for a binary string; and decide if the input string is a valid binary string. For example,

```
Enter a binary string: 10101100
"10101100" is a binary string
```

```
Enter a binary string: 10120000
"10120000" is NOT a binary string
```

Hints

Use the following coding pattern which involves a boolean flag to check the input string.

```
// Declare variables
   String inStr;     // The input string
   int inStrLen;     // The length of the input string
   char inChar;      // Each char of the input string
   boolean isValid;  // "is" or "is not" a valid binary string?
   ......

   isValid = true;  // Assume that the input is valid, unless our check fails
   for (......) {
     inChar = ......;
     if (!(inChar == '0' || inChar == '1')) {
       isValid = false;
       break;  // break the loop upon first error, no need to continue for more errors
               // If this is not encountered, isValid remains true after the loop.
     }
   }
   if (isValid) {
     System.out.println(......);
   } else {
     System.out.println(......);
   }
   // or using one liner
   //System.out.println(isValid ? ... : ...);
```

7.9 CheckHexStr (String & char)

The hexadecimal (hex) number system uses 16 symbols, 0-9 and A-F (or a-f). Write a program to verify a hex string. The program shall prompt user for a hex string; and decide if the input string is a valid hex string. For examples,

```
Enter a hex string: 123aBc
"123aBc" is a hex string

Enter a hex string: 123aBcx
"123aBcx" is NOT a hex string
```

Hints

```
if (!((inChar >= '0' && inChar <= '9')
    || (inChar >= 'A' && inChar <= 'F')
    || (inChar >= 'a' && inChar <= 'f'))) {  // Use positive logic and then reverse
  ......
}
```

7.10 Bin2Dec (String & char)

Write a program called **Bin2Dec** to convert an input binary string into its equivalent decimal number. Your output shall look like:

```
Enter a Binary string: 1011
The equivalent decimal number for binary "1011" is: 11

Enter a Binary string: 1234
error: invalid binary string "1234"
```

Hints

See "Code Example".

7.11 Hex2Dec (String & char)

Write a program called **Hex2Dec** to convert an input hexadecimal string into its equivalent decimal number. Your output shall look like:

```
Enter a Hexadecimal string: 1a
The equivalent decimal number for hexadecimal "1a" is: 26

Enter a Hexadecimal string: 1y3
error: invalid hexadecimal string "1y3"
```

Hints

See "Code Example".

7.12 Oct2Dec (String & char)

Write a program called **Oct2Dec** to convert an input Octal string into its equivalent decimal number. For example,

```
Enter an Octal string: 147
The equivalent decimal number "147" is: 103
```

8. Exercises on Arrays

8.1 PrintArray (Array)

Write a program called PrintArray which prompts user for the number of items in an array (a non-negative integer), and saves it in an int variable called NUM_ITEMS. It then prompts user for the values of all the items and saves them in an int array called items. The program shall then print the contents of the array in the form of [x1, x2, ..., xn]. For example,

```
Enter the number of items: 5
Enter the value of all items (separated by space): 3 2 5 6 9
The values are: [3, 2, 5, 6, 9]
```

Hints

```
// Declare variables
tinal int NUM_ITEMS;
int[] items;  // Declare array name, to be allocated after NUM_ITEMS is known
......

// Prompt for for the number of items and read the input as "int"
......
NUM_ITEMS = ......

// Allocate the array
items = new int[NUM_ITEMS];

// Prompt and read the items into the "int" array, if array length > 0
if (items.length > 0) {
   ......
   for (int i = 0; i < items.length; ++i) {  // Read all items
      ......
   }
}
```

```
// Print array contents, need to handle first item and subsequent items differently
......
for (int i = 0; i < items.length; ++i) {
   if (i == 0) {
      // Print the first item without a leading commas
      ......
   } else {
      // Print the subsequent items with a leading commas
      ......
   }
   // or, using a one liner
   //System.out.print((i == 0) ? ...... : ......);
}
```

8.2 PrintArrayInStars (Array)

Write a program called **printArrayInStars** which prompts user for the number of items in an array (a non-negative integer), and saves it in an int variable called NUM_ITEMS. It then prompts user for the values of all the items (non-negative integers) and saves them in an int array called items. The program shall then print the contents of the array in a graphical form, with the array index and values represented by number of stars. For examples,

```
Enter the number of items: 5
Enter the value of all items (separated by space): 7 4 3 0 7
0: *******(7)
1: ****(4)
2: ***(3)
3: (0)
4: *******(7)
```

Hints

```
// Declare variables
final int NUM_ITEMS;
int[] items;  // Declare array name, to be allocated after NUM_ITEMS is known
......
......
// Print array in "index: number of stars" using a nested-loop
// Take note that rows are the array indexes and columns are the value in that index
for (int idx = 0; idx < items.length; ++idx) {  // row
   System.out.print(idx + ": ");
   // Print value as the number of stars
   for (int starNo = 1; starNo <= items[idx]; ++starNo) {  // column
      System.out.print("*");
   }
   ......
}
......
```

8.3 GradesStatistics (Array)

Write a program which prompts user for the number of students in a class (a non-negative integer), and saves it in an int variable called numStudents. It then prompts user for the grade of each of the students (integer between 0 to 100) and saves them in an int array called grades. The program shall then compute and print the average (in double rounded to 2 decimal places) and minimum/maximum (in int).

```
Enter the number of students: 5
Enter the grade for student 1: 98
Enter the grade for student 2: 78
Enter the grade for student 3: 78
Enter the grade for student 4: 87
Enter the grade for student 5: 76
```

```
The average is: 83.40
The minimum is: 76
The maximum is: 98
```

8.4 Hex2Bin (Array for Table Lookup)

Write a program called **Hex2Bin** that prompts user for a hexadecimal string and print its equivalent binary string. The output shall look like:

```
Enter a Hexadecimal string: 1abc
The equivalent binary for hexadecimal "1abc" is: 0001 1010 1011 1100
```

Hints

1. Use an array of 16 Strings containing binary strings corresponding to hexadecimal number 0-9A-F (or a-f), as follows

```
final String[] HEX_BITS = {"0000", "0001", "0010", "0011",
                "0100", "0101", "0110", "0111",
                "1000", "1001", "1010", "1011",
                "1100", "1101", "1110", "1111"};
```

8.5 Dec2Hex (Array for Table Lookup)

Write a program called **Dec2Hex** that prompts user for a positive decimal number, read as int, and print its equivalent hexadecimal string. The output shall look like:

```
Enter a decimal number: 1234
The equivalent hexadecimal number is 4D2
```

9. Exercises on Methods

9.1 exponent() (method)

Write a method called exponent(int base, int exp) that returns an int value of base raises to the power of exp. The signature of the method is:

```
public static int exponent(int base, int exp);
```

Assume that exp is a non-negative integer and base is an integer. Do not use any Math library functions.
Also write the main() method that prompts user for the base and exp; and prints the result. For example,

```
Enter the base: 3
Enter the exponent: 4
3 raises to the power of 4 is: 81
```

Hints

```
......
public class Exponent {
  public static void main(String[] args) {
    // Declare variables
    int exp;    // exponent (non-negative integer)
    int base;   // base (integer)
    ......
    // Prompt and read exponent and base
    ......
    // Print result
    System.out.println(base + " raises to the power of " + exp + " is: " + exponent(base, exp));
  }
```

```
  // Returns "base" raised to the power "exp"
  public static int exponent(int base, int exp) {
    int product = 1;   // resulting product

    // Multiply product and base for exp number of times
    for (......) {
      product *= base;
    }

    return product;
  }
}
```

9.2 isOdd() (method)

Write a boolean method called isOdd() in a class called **OddEvenTest**, which takes an int as input and returns true if the it is odd. The signature of the method is as follows:

```
public static boolean isOdd(int number);
```

Also write the main() method that prompts user for a number, and prints "ODD" or "EVEN". You should test for negative input. For examples,

```
Enter a number: 9
9 is an odd number

Enter a number: 8
8 is an even number

Enter a number: -5
-5 is an odd number
```

Hints

See Notes.

9.3 hasEight() (method)

Write a boolean method called hasEight(), which takes an int as input and returns true if the number contains the digit 8 (e.g., 18, 168, 1288). The signature of the method is as follows:

```
public static boolean hasEight(int number);
```

Write a program called **MagicSum**, which prompts user for integers (or -1 to end), and produce the sum of numbers containing the digit 8. Your program should use the above methods. A sample output of the program is as follows:

```
Enter a positive integer (or -1 to end): 1
Enter a positive integer (or -1 to end): 2
Enter a positive integer (or -1 to end): 3
Enter a positive integer (or -1 to end): 8
Enter a positive integer (or -1 to end): 88
Enter a positive integer (or -1 to end): -1
The magic sum is: 96
```

Hints

The coding pattern to repeat until input is -1 (called sentinel value) is:

```
final int SENTINEL = -1;  // Terminating input
int number;

// Read first input to "seed" the while loop
System.out.print("Enter a positive integer (or -1 to end): ");
```

```
number = in.nextInt();

while (number != SENTINEL) {  // Repeat until input is -1
   ......
   ......

   // Read next input. Repeat if the input is not the SENTINEL
   // Take note that you need to repeat these codes!
   System.out.print("Enter a positive integer (or -1 to end): ");
   number = in.nextInt();
}
```

You can either repeatably use modulus/divide (n%10 and n=n/10) to extract and drop each digit in int; or convert the int to String and use the String's charAt() to inspect each char.

9.4 print() (Array & Method)

Write a method called **print()**, which takes an int array and print its contents in the form of [a1, a2, ..., an]. Take note that there is no comma after the last element. The method's signature is as follows:

```
public static void print(int[] array);
```

Also write a test driver to test this method (you should test on empty array, one-element array, and n-element array).

How to handle double[] or float[]? You need to write a overloaded version for double[] and a overloaded version for float[], with the following signatures:

```
public static void print(double[] array)
public static void print(float[] array)
```

The above is known as method overloading, where the same method name can have many versions, differentiated by its parameter list.

Hints

For the first element, print its value; for subsequent elements, print commas followed by the value.

9.5 arrayToString() (Array & Method)

Write a method called **arrayToString()**, which takes an int array and return a String in the form of [a1, a2, ..., an]. Take note that this method returns a String, the previous exercise returns void but prints the output. The method's signature is as follows:

```
public static String arrayToString(int[] array);
```

Also write a test driver to test this method (you should test on empty array, one-element array, and n-element array).

Notes: This is similar to the built-in function Arrays.toString(). You could study its source code.

9.6 contains() (Array & Method)

Write a boolean method called **contains()**, which takes an array of int and an int; and returns true if the array contains the given int. The method's signature is as follows:

```
public static boolean contains(int[] array, int key);
```

Also write a test driver to test this method.

9.7 search() (Array & Method)

Write a method called **search()**, which takes an array of int and an int; and returns the array index if the array

contains the given int; or -1 otherwise. The method's signature is as follows:

```
public static int search(int[] array, int key);
```

Also write a test driver to test this method.

9.8 equals() (Array & Method)

Write a boolean method called **equals()**, which takes two arrays of int and returns true if the two arrays are exactly the same (i.e., same length and same contents). The method's signature is as follows:

```
public static boolean equals(int[] array1, int[] array2)
```

Also write a test driver to test this method.

9.9 copyOf() (Array & Method)

Write a boolean method called **copyOf()**, which takes an int Array and returns a copy of the given array. The method's signature is as follows:

```
public static int[] copyOf(int[] array)
```

Also write a test driver to test this method.

Write another version for **copyOf()** which takes a second parameter to specify the length of the new array. You should truncate or pad with zero so that the new array has the required length.

```
public static int[] copyOf(int[] array, int newLength)
```

NOTES: This is similar to the built-in function Arrays.copyOf().

9.10 swap() (Array & Method)

Write a method called **swap()**, which takes two arrays of int and swap their contents if they have the same length. It shall return true if the contents are successfully swapped. The method's signature is as follows:

```
public static boolean swap(int[] array1, int[] array2)
```

Also write a test driver to test this method.

Hints

You need to use a temporary location to swap two storage locations.

```
// Swap item1 and item2
int item1, item2, temp;
temp = item1;
item1 = item2;
item2 = item1;
// You CANNOT simply do: item1 = item2; item2 = item2;
```

9.11 reverse() (Array & Method)

Write a method called **reverse()**, which takes an array of int and reverse its contents. For example, the reverse of [1,2,3,4] is [4,3,2,1]. The method's signature is as follows:

```
public static void reverse(int[] array)
```

Take note that the array passed into the method can be modified by the method (this is called "pass by reference"). On the other hand, primitives passed into a method cannot be modified. This is because a clone is created and passed into the method instead of the original copy (this is called "pass by value").

Also write a test driver to test this method.

Hints

You might use two indexes in the loop, one moving forward and one moving backward to point to the two elements to be swapped.

```
for (int fIdx = 0, bIdx = array.length - 1; fIdx < bIdx; ++fIdx, --bIdx) {
   // Swap array[fIdx] and array[bIdx]
   // Only need to transverse half of the array elements
}
```

You need to use a temporary location to swap two storage locations.

```
// Swap item1 and item2
int item1, item2, temp;
temp = item1;
item1 = item2;
item2 = item1;
// You CANNOT simply do: item1 = item2; item2 = item2;
```

9.12 GradesStatistics (Array & Method)

Write a program called **GradesStatistics**, which reads in n grades (of int between 0 and 100, inclusive) and displays the average, minimum, maximum, median and standard deviation. Display the floating-point values upto 2 decimal places. Your output shall look like:

```
Enter the number of students: 4
Enter the grade for student 1: 50
Enter the grade for student 2: 51
Enter the grade for student 3: 56
Enter the grade for student 4: 53
The grades are: [50, 51, 56, 53]
The average is: 52.50
The median is: 52.00
The minimum is: 50
The maximum is: 56
The standard deviation is: 2.29
```

The formula for calculating standard deviation is:

$$\sigma = \sqrt{\frac{1}{n}\sum_{i=0}^{n-1} x_i^{\,2} - \mu^2}, \text{ where } \mu \text{ is the mean}$$

Hints:

```
public class GradesStatistics {
   public static int[] grades;  // Declare an int[], to be allocated later.
                                // This array is accessible by all the methods.

   public static void main(String[] args) {
      readGrades();  // Read and save the inputs in global int[] grades
      System.out.println("The grades are: ");
      print(grades);
      System.out.println("The average is " + average(grades));
      System.out.println("The median is " + median(grades));
      System.out.println("The minimum is " + min(grades));
      System.out.println("The maximum is " + max(grades));
      System.out.println("The standard deviation is " + stdDev(grades));
   }

   // Prompt user for the number of students and allocate the global "grades" array.
   // Then, prompt user for grade, check for valid grade, and store in "grades".
```

```
   public static void readGrades() { ....... }

   // Print the given int array in the form of [x1, x2, x3,..., xn].
   public static void print(int[] array) { ....... }

   // Return the average value of the given int[]
   public static double average(int[] array) { ...... }

   // Return the median value of the given int[]
   // Median is the center element for odd-number array,
   // or average of the two center elements for even-number array.
   // Use Arrays.sort(anArray) to sort anArray in place.
   public static double median(int[] array) { ...... }

   // Return the maximum value of the given int[]
   public static int max(int[] array) {
      int max = array[0];   // Assume that max is the first element
      // From second element, if the element is more than max, set the max to this element.
      ......
   }

   // Return the minimum value of the given int[]
   public static int min(int[] array) { ....... }

   // Return the standard deviation of the given int[]
   public static double stdDev(int[] array) { ....... }
}
```

Take note that besides readGrade() that relies on global variable grades, all the methods are self-contained general utilities that operate on any given array.

9.13 GradesHistogram (Array & Method)

Write a program called **GradesHistogram**, which reads in n grades (as in the previous exercise), and displays the horizontal and vertical histograms. For example:

```
 0 -  9: ***
10 - 19: ***
20 - 29:
30 - 39:
40 - 49: *
50 - 59: *****
60 - 69:
70 - 79:
80 - 89: *
90 -100: **

                    *
                    *
 *    *              *
 *    *              *              *
 *    *          *   *          *   *
0-9  10-19 20-29 30-39 40-49 50-59 60-69 70-79 80-89 90-100
```

10. Exercises on Command-line Arguments, Recursion

10.1 Arithmetic (Command-Line Arguments)

Write a program called **Arithmetic** that takes three command-line arguments: two integers followed by an arithmetic operator (+, -, * or /). The program shall perform the corresponding operation on the two integers and print the result. For example:

```
java Arithmetic 3 2 +
3+2=5

java Arithmetic 3 2 -
3-2=1

java Arithmetic 3 2 /
3/2=1
```

Hints

The method main(String[] args) takes an argument: "an array of String", which is often (but not necessary) named args. This parameter captures the command-line arguments supplied by the user when the program is invoked. For example, if a user invokes:

```
java Arithmetic 12345 4567 +
```

The three command-line arguments "12345", "4567" and "+" will be captured in a String array {"12345", "4567", "+"} and passed into the main() method as the argument args. That is,

```
args is: {"12345", "4567", "+"}  // args is a String array
args.length is: 3                // length of the array
args[0] is: "12345"              // 1st element of the String array
args[1] is: "4567"               // 2nd element of the String array
args[2] is: "+"                  // 3rd element of the String array
args[0].length() is: 5           // length of 1st String element
args[1].length() is: 4           // length of the 2nd String element
args[2].length() is: 1           // length of the 3rd String element
```

```
public class Arithmetic {
  public static void main (String[] args) {
    int operand1, operand2;
    char theOperator;

    // Check if there are 3 command-line arguments in the
    //  String[] args by using length variable of array.
    if (args.length != 3) {
      System.err.println("Usage: java Arithmetic int1 int2 op");
      return;
    }

    // Convert the 3 Strings args[0], args[1], args[2] to int and char.
    // Use the Integer.parseInt(aStr) to convert a String to an int.
    operand1 = Integer.parseInt(args[0]);
    operand2 = ......

    // Get the operator, assumed to be the first character of
    //  the 3rd string. Use method charAt() of String.
    theOperator = args[2].charAt(0);
    System.out.print(args[0] + args[2] + args[1] + "=");

    switch(theOperator) {
      case ('-'): System.out.println(operand1 - operand2); break;
      case ('+'): ......
      case ('*'): ......
```

```
      case ('/'): ......
      default:
        System.err.println("Error: invalid operator!");
    }
  }
}
```

Notes:

- To provide command-line arguments, use the "cmd" or "terminal" to run your program in the form "java ClassName arg1 arg2 ....".
- To provide command-line arguments in Eclipse, right click the source code ⇒ "Run As" ⇒ "Run Configurations..." ⇒ Select "Main" and choose the proper main class ⇒ Select "Arguments" ⇒ Enter the command-line arguments, e.g., "3 2 +" in "Program Arguments".
- To provide command-line arguments in NetBeans, right click the "Project" name ⇒ "Set Configuration" ⇒ "Customize..." ⇒ Select categories "Run" ⇒ Enter the command-line arguments, e.g., "3 2 +" in the "Arguments" box (but make sure you select the proper Main class).

Question: Try "java Arithmetic 2 4 *" (in CMD shell and Eclipse/NetBeans) and explain the result obtained. How to resolve this problem?

In Windows' CMD shell, * is known as a wildcard character, that expands to give the list of file in the directory (called Shell Expansion). For example, "dir *.java" lists all the file with extension of ".java". You could double-quote the * to prevent shell expansion. Eclipse has a bug in handling this, even * is double-quoted. NetBeans??

SumDigits (Command-line Arguments)

Write a program called **SumDigits** to sum up the individual digits of a positive integer, given in the command line. The output shall look like:

```
java SumDigits 12345
The sum of digits = 1 + 2 + 3 + 4 + 5 = 15
```

Exercises on Recursion

In programming, a recursive function (or method) calls itself. The classical example is factorial(n), which can be defined recursively as f(n)=n*f(n-1). Nonetheless, it is important to take note that a recursive function should have a terminating condition (or base case), in the case of factorial, f(0)=1. Hence, the full definition is:

```
factorial(n) = 1, for n = 0
factorial(n) = n * factorial(n-1), for all n > 1
```

For example, suppose n = 5:

```
// Recursive call
factorial(5) = 5 * factorial(4)
factorial(4) = 4 * factorial(3)
factorial(3) = 3 * factorial(2)
factorial(2) = 2 * factorial(1)
factorial(1) = 1 * factorial(0)
factorial(0) = 1  // Base case
// Unwinding
factorial(1) = 1 * 1 = 1
factorial(2) = 2 * 1 = 2
factorial(3) = 3 * 2 = 6
factorial(4) = 4 * 6 = 24
factorial(5) = 5 * 24 = 120 (DONE)
```

10.2 Factorial Recursive

Write a recursive method called factorial() to compute the factorial of the given integer.

```
public static int factorial(int n)
```

The recursive algorithm is:

```
factorial(n) = 1, if n = 0
factorial(n) = n * factorial(n-1), if n > 0
```

Compare your code with the iterative version of the factorial():

```
factorial(n) = 1*2*3*...*n
```

Hints

Writing recursive function is straight forward. You simply translate the recursive definition into code with return.

```
// Return the factorial of the given integer, recursively
public static int factorial(int n) {
  if (n == 0) {
    return 1;   // base case
  } else {
    return n * factorial(n-1);  // call itself
  }
  // or one liner
  // return (n == 0) ? 1 : n*factorial(n-1);
}
```

Notes

1. Recursive version is often much shorter.
2. The recursive version uses much more computational and storage resources, and it need to save its current states before each successive recursive call, so as to unwind later.

10.3 Fibonacci (Recursive)

Write a recursive method to compute the Fibonacci number of n, defined as follows:

```
F(0) = 0
F(1) = 1
F(n) = F(n-1) + F(n-2)  for n >= 2
```

Compare the recursive version with the iterative version written earlier.

Hints

```
// Translate the recursive definition into code with return statements
public static int fibonacci(int n) {
  if (n == 0) {
    return 0;
  } else if (n == 1) {
    return 1;
  } else {
    return fibonacci(n-1) + fibonacci(n-2);
  }
}
```

10.4 Length of a Running Number Sequence (Recursive)

A special number sequence is defined as follows:

```
S(1) = 1
S(2) = 12
S(3) = 123
```

```
S(4) = 1234
......
S(9) = 123456789        // length is 9
S(10) = 12345678910      // length is 11
S(11) = 1234567891011    // length is 13
S(12) = 123456789101112  // length is 15
......
```

Write a recursive method to compute the length of S(n), defined as follows:

```
len(1) = 1
len(n) = len(n-1) + numOfDigits(n)
```

Also write an iterative version.

10.5 GCD (Recursive)

Write a recursive method called gcd() to compute the greatest common divisor of two given integers.

```
public static void int gcd(int a, int b)

gcd(a,b) = a, if b = 0
gcd(a,b) = gcd(b, remainder(a,b)), if b > 0
```

11. More (Difficult) Exercises

11.1 JDK Source Code

Extract the source code of the class Math from the JDK source code (JDK Installed Directory ⇒ "lib" ⇒ "src.zip" ⇒ "java.base" ⇒ "java" ⇒ "lang" ⇒ "Math.java"). Study how constants such as E and PI are defined. Also study how methods such as abs(), max(), min(), toDegree(), etc, are written.

Also study the "Integer.java", "String.java".

11.2 Matrices (2D Arrays)

Similar to Math class, write a Matrix library that supports matrix operations (such as addition, subtraction, multiplication) via 2D arrays. The operations shall support both double and int. Also write a test class to exercise all the operations programmed.

Hints

```
public class Matrix {
  // Method signatures
  public static void print(int[][] m);
  public static void print(double[][] m);
  public static boolean haveSameDimension(int[][] m1, int[][] m2);  // Used in add(), subtract()
  public static boolean haveSameDimension(double[][] m1, double[][] m2);
  public static int[][] add(int[][] m1, int[][] m2);
  public static double[][] add(double[][] m1, double[][] m2);
  public static int[][] subtract(int[][] m1, int[][] m2);
  public static double[][] subtract(double[][] m1, double[][] m2);
  public static int[][] multiply(int[][] m1, int[][] m2);
  public static double[][] multiply(double[][] m1, double[][] m2);
  ......
}
```

11.3 PrintAnimalPattern (Special Characters and Escape Sequences)

Write a program called **PrintAnimalPattern**, which uses println() to produce this pattern:

```
        '__'
```

```
      (©©)
 /=======\/
/ || %% ||
*  ||----||
  ¥¥   ¥¥
  ""   ""
```

Hints

Use escape sequence \uhhhh where hhhh are four hex digits to display Unicode characters such as ¥ and ©. ¥ is 165 (00A5H) and © is 169 (00A9H) in both ISO-8859-1 (Latin-1) and Unicode character sets.

Double-quote (") and black-slash (\) require escape sequence inside a String. Single quote (') does not require escape sign.

Try

Print the same pattern using printf(). (Hints: Need to use %% to print a % in printf() because % is the suffix for format specifier.)

11.4 Print Patterns (nested-loop)

Write a method to print each of the followings patterns using nested loops in a class called **PrintPatterns**. The program shall prompt user for the sizde of the pattern. The signatures of the methods are:

```
public static void printPatternX(int size);  // X: A, B, C,...; size is a positive integer.
```

```
###########          #                #
 #########          ###              ###
  #######          #####            #####
   #####          #######          #######
    ###          #########        #########
     #          ###########      ###########
    (a)              (b)            #########
                                   #######
                                    #####
                                     ###
                                      #
                                     (c)

1            1 2 3 4 5 6 7 8          1    8 7 6 5 4 3 2 1
1 2            1 2 3 4 5 6 7          2 1    7 6 5 4 3 2 1
1 2 3            1 2 3 4 5 6          3 2 1    6 5 4 3 2 1
1 2 3 4            1 2 3 4 5          4 3 2 1    5 4 3 2 1
1 2 3 4 5            1 2 3 4          5 4 3 2 1    4 3 2 1
1 2 3 4 5 6            1 2 3          6 5 4 3 2 1    3 2 1
1 2 3 4 5 6 7            1 2          7 6 5 4 3 2 1    2 1
1 2 3 4 5 6 7 8            1          8 7 6 5 4 3 2 1    1
   (d)          (e)            (f)          (g)
```

```
        1                1 2 3 4 5 6 7 8 7 6 5 4 3 2 1
      1 2 1                1 2 3 4 5 6 7 6 5 4 3 2 1
     1 2 3 2 1               1 2 3 4 5 6 5 4 3 2 1
    1 2 3 4 3 2 1              1 2 3 4 5 4 3 2 1
   1 2 3 4 5 4 3 2 1             1 2 3 4 3 2 1
  1 2 3 4 5 6 5 4 3 2 1            1 2 3 2 1
 1 2 3 4 5 6 7 6 5 4 3 2 1           1 2 1
1 2 3 4 5 6 7 8 7 6 5 4 3 2 1          1
        (h)                      (i)

1                 1    1 2 3 4 5 6 7 8 7 6 5 4 3 2 1
1 2              2 1    1 2 3 4 5 6 7  7 6 5 4 3 2 1
1 2 3           3 2 1    1 2 3 4 5 6    6 5 4 3 2 1
1 2 3 4        4 3 2 1    1 2 3 4 5      5 4 3 2 1
1 2 3 4 5     5 4 3 2 1    1 2 3 4        4 3 2 1
1 2 3 4 5 6   6 5 4 3 2 1    1 2 3          3 2 1
1 2 3 4 5 6 7  7 6 5 4 3 2 1    1 2            2 1
1 2 3 4 5 6 7 8 7 6 5 4 3 2 1    1              1
        (j)                      (k)

        1
      2 3 2
     3 4 5 4 3
    4 5 6 7 6 5 4
   5 6 7 8 9 8 7 6 5
  6 7 8 9 0 1 0 9 8 7 6
 7 8 9 0 1 2 3 2 1 0 9 8 7
8 9 0 1 2 3 4 5 4 3 2 1 0 9 8
        (l)
```

11.5 Print Triangles (nested-loop)

Write a method to print each of the following patterns using nested-loops in a class called **PrintTriangles**. The program shall prompt user for the number of rows. The signatures of the methods are:

```
public static void printXxx(int numRows);  // Xxx is the pattern's name
```

```
                1
              1   2   1
            1   2   4   2   1
          1   2   4   8   4   2   1
        1   2   4   8  16   8   4   2   1
      1   2   4   8  16  32  16   8   4   2   1
    1   2   4   8  16  32  64  32  16   8   4   2   1
  1   2   4   8  16  32  64 128  64  32  16   8   4   2   1
```

(a) PowerOf2Triangle

```
1                           1
```

```
1  1                        1   1
1  2  1                     1   2   1
1  3  3  1                  1   3   3   1
1  4  6  4  1               1   4   6   4   1
1  5 10 10  5  1            1   5  10  10   5   1
1  6 15 20 15  6  1         1   6  15  20  15   6   1
```

(b) PascalTriangle1 (c) PascalTriangle2

11.6 Trigonometric Series

Write a method to compute sin(x) and cos(x) using the following series expansion, in a class called **TrigonometricSeries**. The signatures of the methods are:

```
public static double sin(double x, int numTerms);   // x in radians, NOT degrees
public static double cos(double x, int numTerms);
```

$$\sin(x) = x - \frac{x^3}{3!} + \frac{x^5}{5!} - \frac{x^7}{7!} + \frac{x^9}{9!} - \cdots$$

$$\cos(x) = 1 - \frac{x^2}{2!} + \frac{x^4}{4!} - \frac{x^6}{6!} + \frac{x^8}{8!} - \cdots$$

Compare the values computed using the series with the JDK methods Math.sin(), Math.cos() at x=0, π/6, π/4, π/3, π/2 using various numbers of terms.

Hints

Do not use int to compute the factorial; as factorial of 13 is outside the int range. Avoid generating large numerator and denominator. Use double to compute the terms as:

$$\frac{x^n}{n!} = \left(\frac{x}{n}\right)\left(\frac{x}{n-1}\right)\cdots\left(\frac{x}{1}\right)$$

11.7 Exponential Series

Write a method to compute e and exp(x) using the following series expansion, in a class called **ExponentialSeries**. The signatures of the methods are:

```
public static double exp(int numTerms);   // x in radians
public static double exp(double x, int numTerms);
```

$$e = 1 + \frac{1}{1!} + \frac{1}{2!} + \frac{1}{3!} + \frac{1}{4!} + \cdots$$

$$e^x = 1 + \frac{x}{1!} + \frac{x^2}{2!} + \frac{x^3}{3!} + \frac{x^4}{4!} + \cdots$$

11.8 Special Series

Write a method to compute the sum of the series in a class called SpecialSeries. The signature of the method is:

```
public static double specialSeries(double x, int numTerms);
```

$$x + \frac{1}{2}\times\frac{x^3}{3} + \frac{1\times 3}{2\times 4}\times\frac{x^5}{5} + \frac{1\times 3\times 5}{2\times 4\times 6}\times\frac{x^7}{7} + \frac{1\times 3\times 5\times 7}{2\times 4\times 6\times 8}\times\frac{x^9}{9} + \cdots;\ -1 \le x \le 1$$

11.9 FactorialInt (Handling Overflow)

Write a program called **FactorialInt** to list all the factorials that can be expressed as an int (i.e., 32-bit signed integer in the range of [-2147483648, 2147483647]). Your output shall look like:

```
The factorial of 1 is 1
The factorial of 2 is 2
...
```

```
The factorial of 12 is 479001600
The factorial of 13 is out of range
```

Hints

The maximum and minimum values of a 32-bit int are kept in constants Integer.MAX_VALUE and Integer.MIN_VALUE, respectively. Try these statements:

```
System.out.println(Integer.MAX_VALUE);
System.out.println(Integer.MIN_VALUE);
System.out.println(Integer.MAX_VALUE + 1);
```

Take note that in the third statement, Java Runtime does not flag out an overflow error, but silently wraps the number around. Hence, you cannot use F(n) * (n+1) > Integer.MAX_VALUE to check for overflow. Instead, overflow occurs for F(n+1) if (Integer.MAX_VALUE / Factorial(n)) < (n+1), i.e., no more room for the next number.

Try

Modify your program called **FactorialLong** to list all the factorial that can be expressed as a long (64-bit signed integer). The maximum value for long is kept in a constant called Long.MAX_VALUE.

11.10 FibonacciInt (Handling Overflow)

Write a program called **FibonacciInt** to list all the Fibonacci numbers, which can be expressed as an int (i.e., 32-bit signed integer in the range of [-2147483648, 2147483647]). The output shall look like:

```
F(0) = 1
F(1) = 1
F(2) = 2
...
F(45) = 1836311903
F(46) is out of the range of int
```

Hints

The maximum and minimum values of a 32-bit int are kept in constants Integer.MAX_VALUE and Integer.MIN_VALUE, respectively. Try these statements:

```
System.out.println(Integer.MAX_VALUE);
System.out.println(Integer.MIN_VALUE);
System.out.println(Integer.MAX_VALUE + 1);
```

Take note that in the third statement, Java Runtime does not flag out an overflow error, but silently wraps the number around. Hence, you cannot use F(n) = F(n-1) + F(n-2) > Integer.MAX_VALUE to check for overflow. Instead, overflow occurs for F(n) if Integer.MAX_VALUE – F(n-1) < F(n-2) (i.e., no more room for the next Fibonacci number).

Try

Write a similar program called **TribonacciInt** for Tribonacci numbers.

11.11 Number System Conversion

Write a method call **toRadix()** which converts a positive integer from one radix into another. The method has the following header:

public static String **toRadix**(String in, int inRadix, int outRadix) // The input and output are treated as String.

Write a program called **NumberConversion**, which prompts the user for an input string, an input radix, and an output radix, and display the converted number. The output shall look like:

```
Enter a number and radix: A1B2
Enter the input radix: 16
Enter the output radix: 2
"A1B2" in radix 16 is "1010000110110010" in radix 2.
```

11.12 NumberGuess

Write a program called **NumberGuess** to play the number guessing game. The program shall generate a random number between 0 and 99. The player inputs his/her guess, and the program shall response with "Try higher", "Try lower" or "You got it in n trials" accordingly. For example:

```
java NumberGuess
Key in your guess:
50
Try higher
70
Try lower
65
Try lower
61
You got it in 4 trials!
```

Hints

Use Math.random() to produce a random number in double between 0.0 (inclusive) and 1.0 (exclusive). To produce an int between 0 and 99, use:

```
final int SECRET_NUMBER = (int)(Math.random()*100);  // truncate to int
```

11.13 WordGuess

Write a program called **WordGuess** to guess a word by trying to guess the individual characters. The word to be guessed shall be provided using the command-line argument. Your program shall look like:

```
java WordGuess testing
Key in one character or your guess word: t
Trial 1: t__t___
Key in one character or your guess word: g
Trial 2: t__t__g
Key in one character or your guess word: e
Trial 3: te_t__g
Key in one character or your guess word: testing
Congratulation!
You got in 4 trials
```

Hints

Set up a boolean array (of the length of the word to be guessed) to indicate the positions of the word that have been guessed correctly.

Check the length of the input String to determine whether the player enters a single character or a guessed word. If the player enters a single character, check it against the word to be guessed, and update the boolean array that keeping the result so far.

Try

Try retrieving the word to be guessed from a text file (or a dictionary) randomly.

11.14 DateUtil

Complete the following methods in a class called **DateUtil**:

- boolean isLeapYear(int year): returns true if the given year is a leap year. A year is a leap year if it is divisible by 4 but not by 100, or it is divisible by 400.
- boolean isValidDate(int year, int month, int day): returns true if the given year, month and day constitute a given date. Assume that year is between 1 and 9999, month is between 1 (Jan) to 12 (Dec) and day shall be between 1 and 28|29|30|31 depending on the month and whether it is a leap year.
- int getDayOfWeek(int year, int month, int day): returns the day of the week, where 0 for SUN, 1 for MON, ..., 6 for SAT, for the given date. Assume that the date is valid.
- String toString(int year, int month, int day): prints the given date in the format "xxxday d mmm yyyy", e.g., "Tuesday 14 Feb 2012". Assume that the given date is valid.

Hints

To find the day of the week (Reference: Wiki "Determination of the day of the week"):

1700-	1800-	1900-	2000-	2100-	2200-	2300-	2400-
4	2	0	6	4	2	0	6

1. Based on the first two digit of the year, get the number from the following "century" table.
2. Take note that the entries 4, 2, 0, 6 repeat.
3. Add to the last two digit of the year.
4. Add to "the last two digit of the year divide by 4, truncate the fractional part".
5. Add to the number obtained from the following month table:

	Jan	Feb	Mar	Apr	May	Jun	Jul	Aug	Sep	Oct	Nov	Dec
Non-Leap Year	0	3	3	6	1	4	6	2	5	0	3	5
Leap Year	6	2	same as above									

6. Add to the day.
7. The sum modulus 7 gives the day of the week, where 0 for SUN, 1 for MON, ..., 6 for SAT.

For example: 2012, Feb, 17

```
(6 + 12 + 12/4 + 2 + 17) % 7 = 5 (Fri)
```

The skeleton of the program is as follows:

```
/* Utilities for Date Manipulation */
public class DateUtil {

   // Month's name – for printing
   public static String[] strMonths
      = {"Jan", "Feb", "Mar", "Apr", "May", "Jun",
         "Jul", "Aug", "Sep", "Oct", "Nov", "Dec"};

   // Number of days in each month (for non-leap years)
   public static int[] daysInMonths
      = {31, 28, 31, 30, 31, 30, 31, 31, 30, 31, 30, 31};

   // Returns true if the given year is a leap year
   public static boolean isLeapYear(int year) { ...... }
```

```
   // Return true if the given year, month, day is a valid date
   // year: 1-9999
   // month: 1(Jan)-12(Dec)
   // day: 1-28|29|30|31. The last day depends on year and month
   public static boolean isValidDate(int year, int month, int day) { ...... }

   // Return the day of the week, 0:Sun, 1:Mon, ..., 6:Sat
   public static int getDayOfWeek(int year, int month, int day) { ...... }

   // Return String "xxxday d mmm yyyy" (e.g., Wednesday 29 Feb 2012)
   public static String printDate(int year, int month, int day) { ...... }

   // Test Driver
   public static void main(String[] args) {
      System.out.println(isLeapYear(1900));  // false
      System.out.println(isLeapYear(2000));  // true
      System.out.println(isLeapYear(2011));  // false
      System.out.println(isLeapYear(2012));  // true

      System.out.println(isValidDate(2012, 2, 29));  // true
      System.out.println(isValidDate(2011, 2, 29));  // false
      System.out.println(isValidDate(2099, 12, 31)); // true
      System.out.println(isValidDate(2099, 12, 32)); // false

      System.out.println(getDayOfWeek(1982, 4, 24));  // 6:Sat
      System.out.println(getDayOfWeek(2000, 1, 1));   // 6:Sat
      System.out.println(getDayOfWeek(2054, 6, 19));  // 5:Fri
      System.out.println(getDayOfWeek(2012, 2, 17));  // 5:Fri

      System.out.println(toString(2012, 2, 14)); // Tuesday 14 Feb 2012
   }
}
```

Notes

You can compare the day obtained with the Java's Calendar class as follows:

```
// Construct a Calendar instance with the given year, month and day
Calendar cal = new GregorianCalendar(year, month - 1, day);  // month is 0-based
// Get the day of the week number: 1 (Sunday) to 7 (Saturday)
int dayNumber = cal.get(Calendar.DAY_OF_WEEK);
String[] calendarDays = { "Sunday", "Monday", "Tuesday", "Wednesday",
                          "Thursday", "Friday", "Saturday" };
// Print result
System.out.println("It is " + calendarDays[dayNumber - 1]);
```

The calendar we used today is known as Gregorian calendar, which came into effect in October 15, 1582 in some countries and later in other countries. It replaces the Julian calendar. 10 days were removed from the calendar, i.e., October 4, 1582 (Julian) was followed by October 15, 1582 (Gregorian). The only difference between the Gregorian and the Julian calendar is the "leap-year rule". In Julian calendar, every four years is a leap year. In Gregorian calendar, a leap year is a year that is divisible by 4 but not divisible by 100, or it is divisible by 400, i.e., the Gregorian calendar omits century years which are not divisible by 400. Furthermore, Julian calendar considers the first day of the year as march 25th, instead of January 1st.

This above algorithm work for Gregorian dates only. It is difficult to modify the above algorithm to handle pre-Gregorian dates. A better algorithm is to find the number of days from a known date.

12. Exercises on Classes and Objects

12.1 The Rectangle Class

A class called Rectangle, which models a rectangle with a length and a width (in float), is designed as shown in the following class diagram. Write the Rectangle class.

Hints:

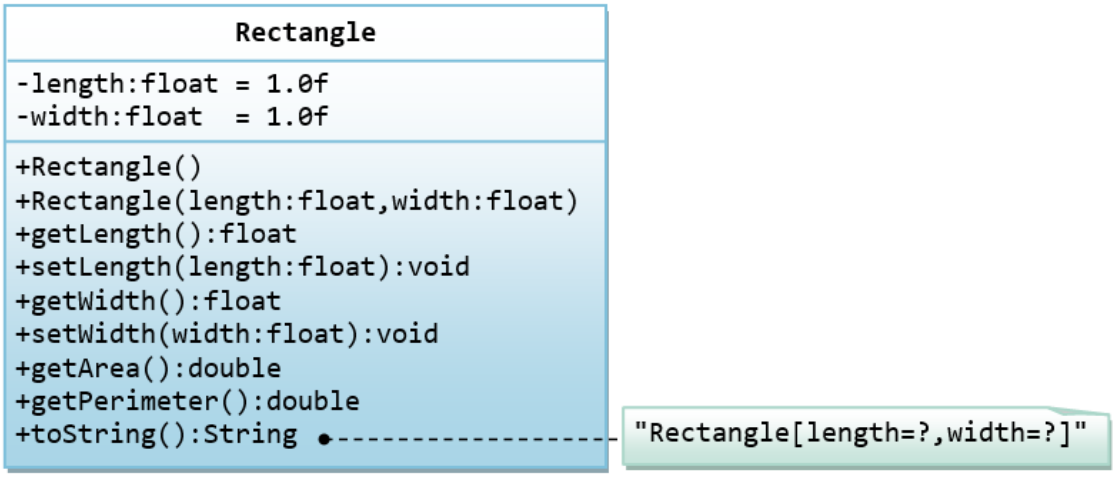

The expected output is:

```
Rectangle[length=1.2,width=3.4]
Rectangle[length=1.0,width=1.0]
Rectangle[length=5.6,width=7.8]
length is: 5.6
width is: 7.8
area is: 43.68
perimeter is: 26.80
```

12.2 The Employee Class

A class called Employee, which models an employee with an ID, name and salary, is designed as shown in the following class diagram. The method raiseSalary(percent) increases the salary by the given percentage. Write the Employee class.

Hints:

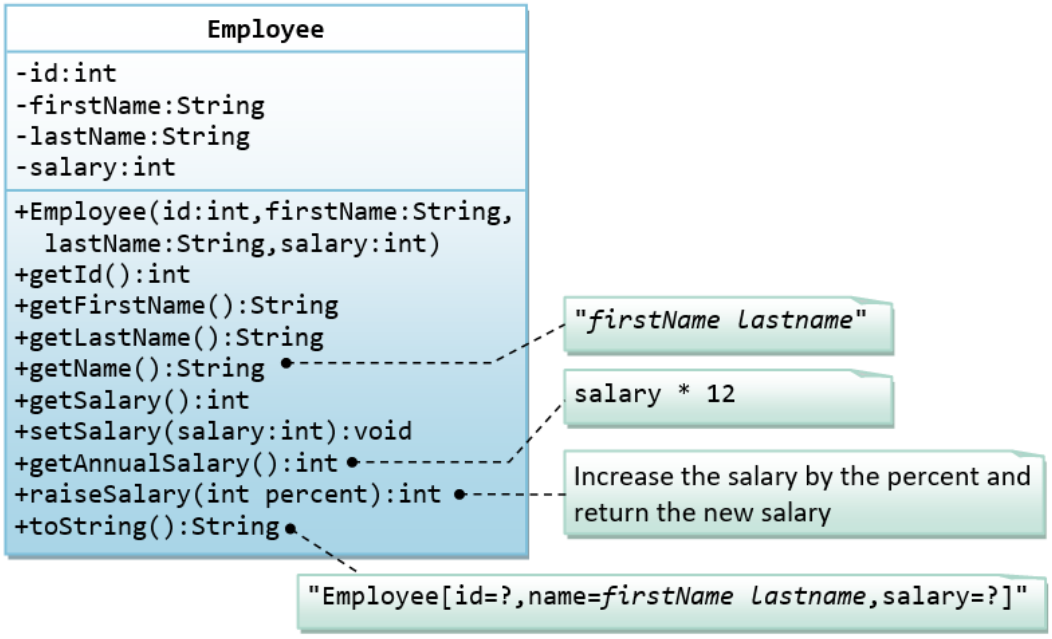

The expected out is:

```
Employee[id=8,name=Peter Tan,salary=2500]
Employee[id=8,name=Peter Tan,salary=999]
id is: 8
firstname is: Peter
lastname is: Tan
salary is: 999
name is: Peter Tan
annual salary is: 11988
1098
Employee[id=8,name=Peter Tan,salary=1098]
```

12.3 The InvoiceItem Class

A class called InvoiceItem, which models an item of an invoice, with ID, description, quantity and unit price, is designed as shown in the following class diagram. Write the InvoiceItem class.

Hints:

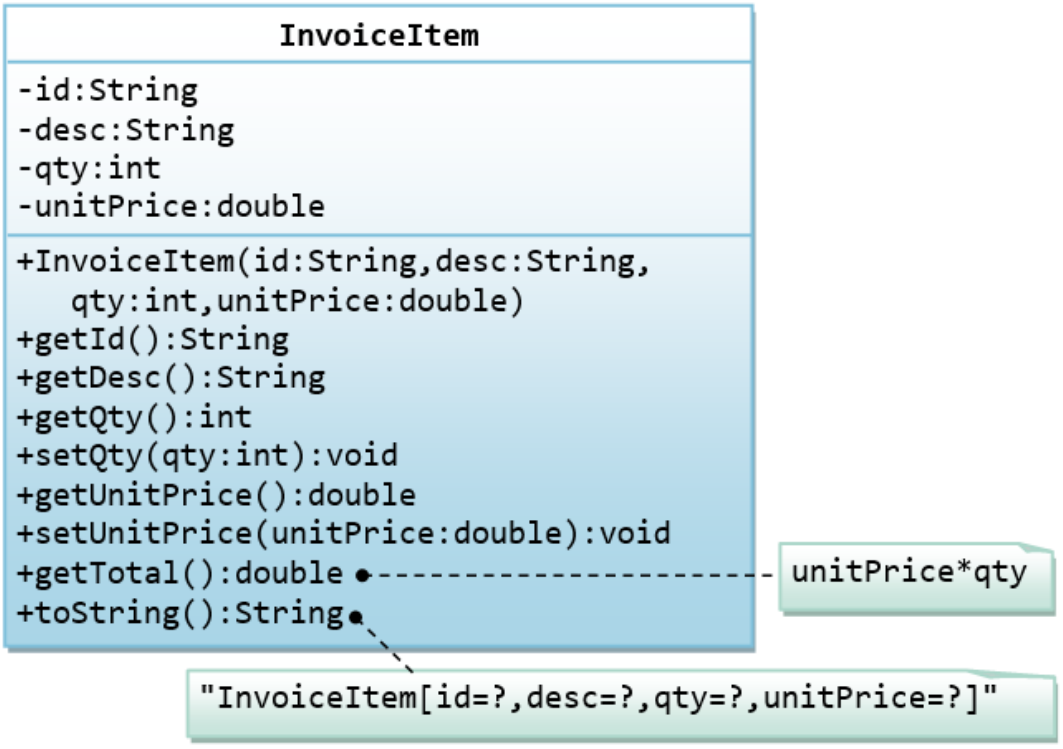

The expected output is:

```
InvoiceItem[id=A101,desc=Pen Red,qty=888,unitPrice=0.08]
InvoiceItem[id=A101,desc=Pen Red,qty=999,unitPrice=0.99]
id is: A101
desc is: Pen Red
qty is: 999
unitPrice is: 0.99
The total is: 989.01
```

12.4 The Account Class

A class called Account, which models a bank account of a customer, is designed as shown in the following class diagram. The methods credit(amount) and debit(amount) add or subtract the given amount to the balance. The method transferTo(anotherAccount, amount) transfers the given amount from this Account to the given anotherAccount. Write the Account class.

Hints:

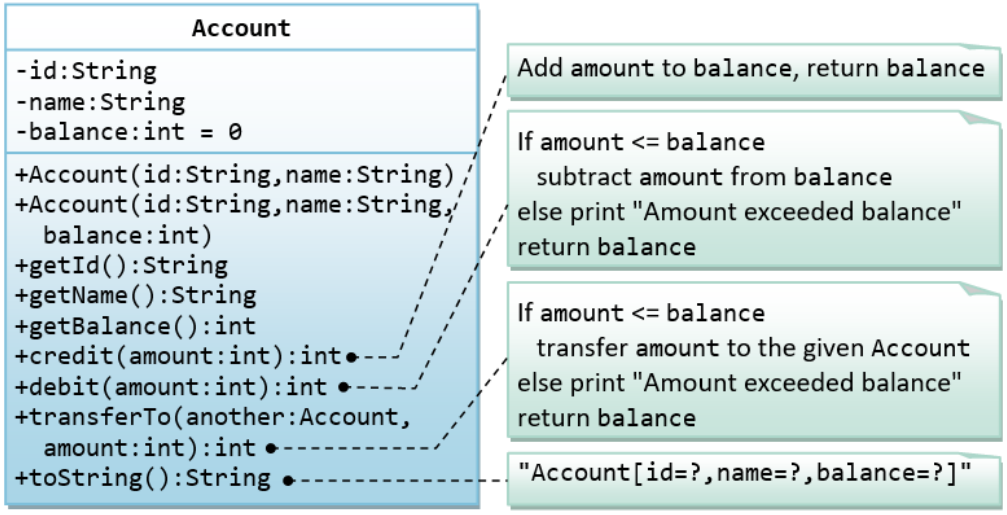

The expected output is:

```
Account[id=A101,name=Tan Ah Teck,balance=88]
Account[id=A102,name=Kumar,balance=0]
ID: A101
Name: Tan Ah Teck
Balance: 88
Account[id=A101,name=Tan Ah Teck,balance=188]
Account[id=A101,name=Tan Ah Teck,balance=138]
Amount exceeded balance
Account[id=A101,name=Tan Ah Teck,balance=138]
Account[id=A101,name=Tan Ah Teck,balance=38]
Account[id=A102,name=Kumar,balance=100]
```

12.5 The Date Class

A class called Date, which models a calendar date, is designed as shown in the following class diagram. Write the Date class.

Hints:

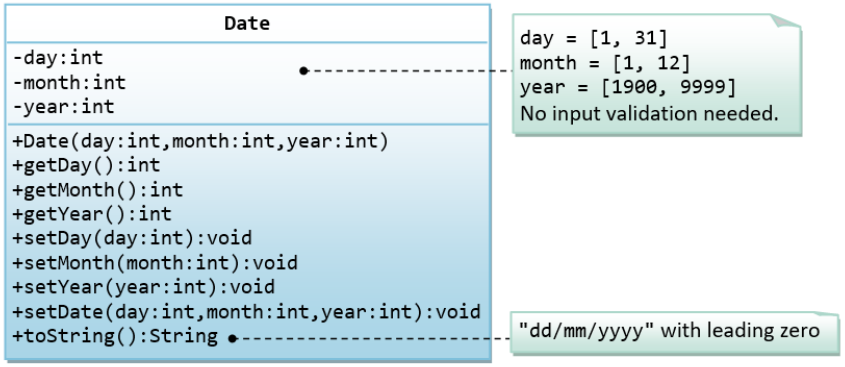

The expected output is:

```
01/02/2014
09/12/2099
Month: 12
Day: 9
Year: 2099
03/04/2016
```

13. Exercises on Inheritance

13.1 An Introduction to OOP Inheritance - The Circle and Cylinder Classes

This exercise shall guide you through the important concepts in inheritance.

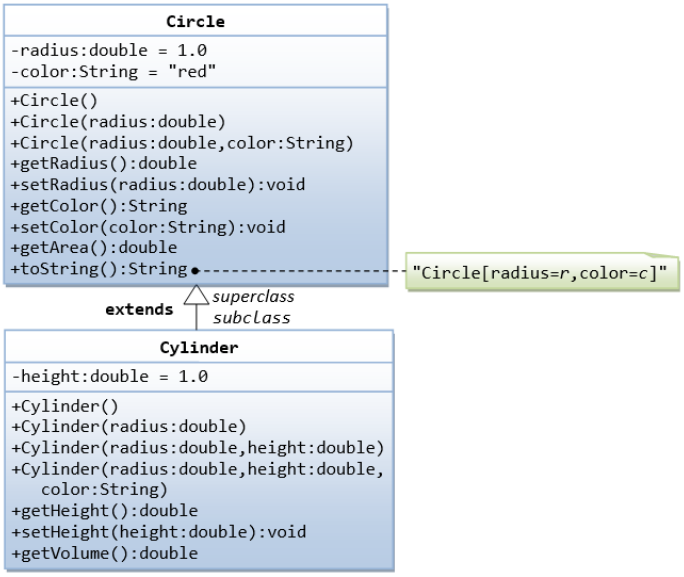

In this exercise, a subclass called Cylinder is derived from the superclass Circle as shown in the class diagram (where an an arrow pointing up from the subclass to its superclass). Study how the subclass Cylinder invokes the

superclass' constructors (via super() and super(radius)) and inherits the variables and methods from the superclass Circle.

You can reuse the Circle class that you have created in the previous exercise. Make sure that you keep "Circle.class" in the same directory.

```
public class Cylinder extends Circle {  // Save as "Cylinder.java"
   private double height;  // private variable

   // Constructor with default color, radius and height
   public Cylinder() {
      super();       // call superclass no-arg constructor Circle()
      height = 1.0;
   }
   // Constructor with default radius, color but given height
   public Cylinder(double height) {
      super();       // call superclass no-arg constructor Circle()
      this.height = height;
   }
   // Constructor with default color, but given radius, height
   public Cylinder(double radius, double height) {
      super(radius);  // call superclass constructor Circle(r)
      this.height = height;
   }

   // A public method for retrieving the height
   public double getHeight() {
      return height;
   }

   // A public method for computing the volume of cylinder
   //  use superclass method getArea() to get the base area
   public double getVolume() {
      return getArea()*height;
   }
}
```

Method Overriding and "Super": The subclass Cylinder inherits getArea() method from its superclass Circle. Try overriding the getArea() method in the subclass Cylinder to compute the surface area (=2π×radius×height + 2×base-area) of the cylinder instead of base area. That is, if getArea() is called by a Circle instance, it returns the area. If getArea() is called by a Cylinder instance, it returns the surface area of the cylinder.

If you override the getArea() in the subclass Cylinder, the getVolume() no longer works. This is because the getVolume() uses the overridden getArea() method found in the same class. (Java runtime will search the superclass only if it cannot locate the method in this class). Fix the getVolume().

Hints: After overridding the getArea() in subclass Cylinder, you can choose to invoke the getArea() of the superclass Circle by calling super.getArea().

Try:

Provide a toString() method to the Cylinder class, which overrides the toString() inherited from the superclass Circle, e.g.,

```
@Override
public String toString() {      // in Cylinder class
   return "Cylinder: subclass of " + super.toString()  // use Circle's toString()
         + " height=" + height;
}
```

Try out the toString() method in TestCylinder.

13.2 Superclass Person and its subclasses

Write the classes as shown in the following class diagram. Mark all the overridden methods with annotation @Override.

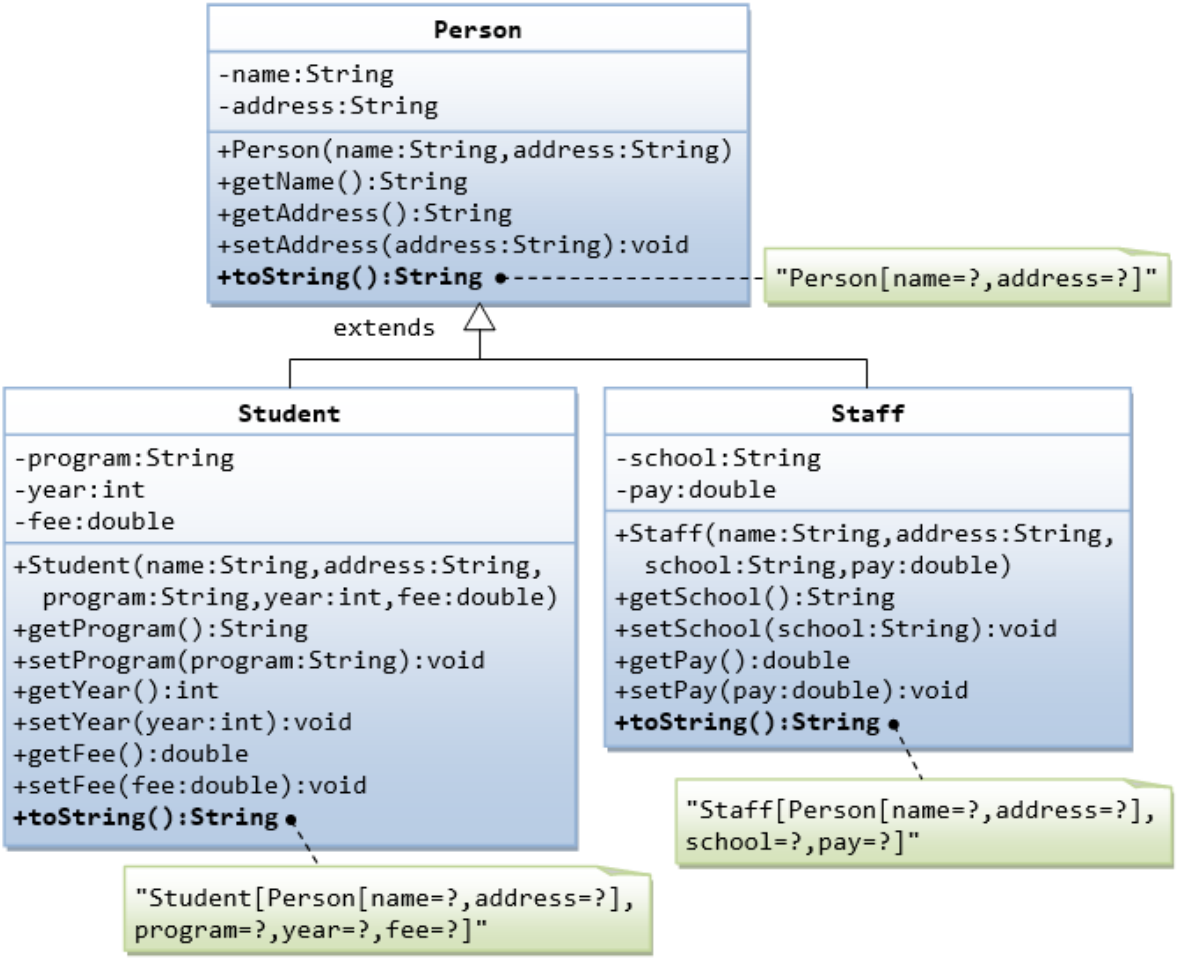

13.3 Point2D and Point3D

Write the classes as shown in the following class diagram. Mark all the overridden methods with annotation @Override.

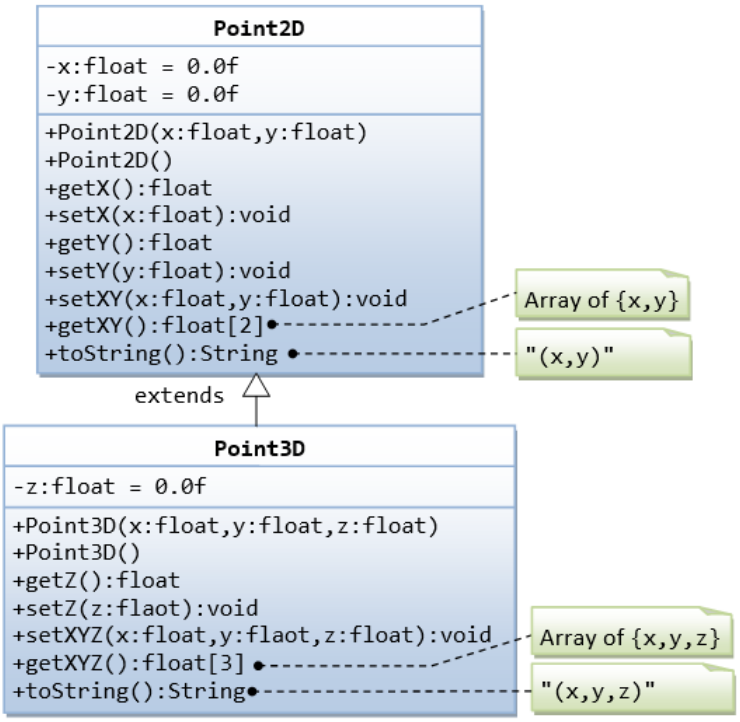

Hints:

1. You cannot assign floating-point literal say 1.1 (which is a double) to a float variable, you need to add a suffix f, e.g. 0.0f, 1.1f.
2. The instance variables x and y are private in Point2D and cannot be accessed directly in the subclass Point3D. You need to access via the public getters and setters. For example,

```
public void setXYZ(float x, float y, float z) {
    setX(x);     // or super.setX(x), use setter in superclass
    setY(y);
    this.z = z;
  }
```

3. The method getXY() shall return a float array:

```
public float[] getXY() {
    float[] result = new float[2];  // construct an array of 2 elements
    result[0] = ...
    result[1] = ...
    return result;  // return the array
  }
```

13.4 Point and MovablePoint

Write the classes as shown in the following class diagram. Mark all the overridden methods with annotation @Override.

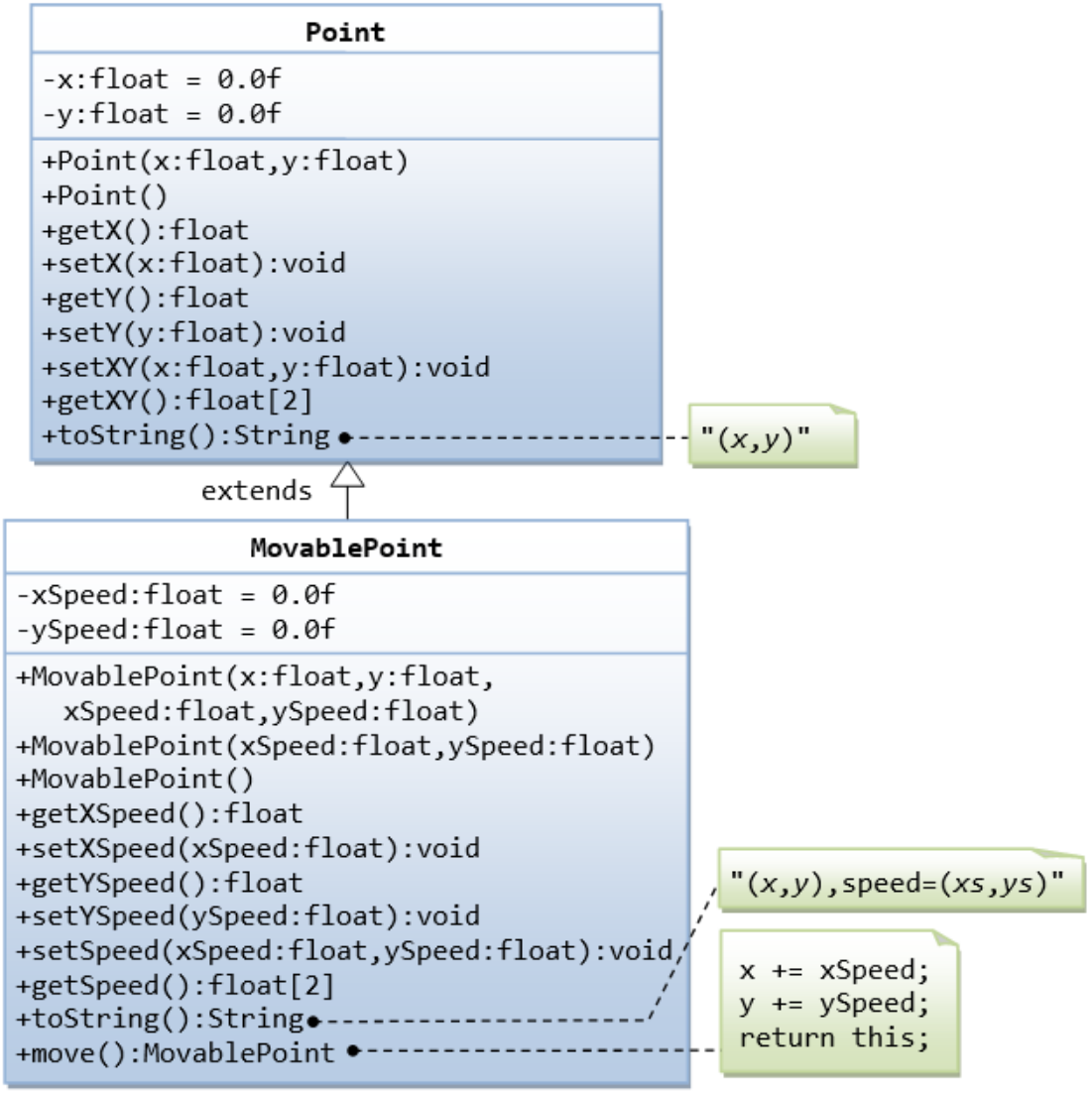

Hints

1. You cannot assign floating-point literal say 1.1 (which is a double) to a float variable, you need to add a suffix f, e.g. 0.0f, 1.1f.
2. The instance variables x and y are private in Point and cannot be accessed directly in the subclass MovablePoint. You need to access via the public getters and setters. For example, you cannot write x += xSpeed, you need to write setX(getX() + xSpeed).

13.5 Superclass Shape and its subclasses Circle, Rectangle and Square

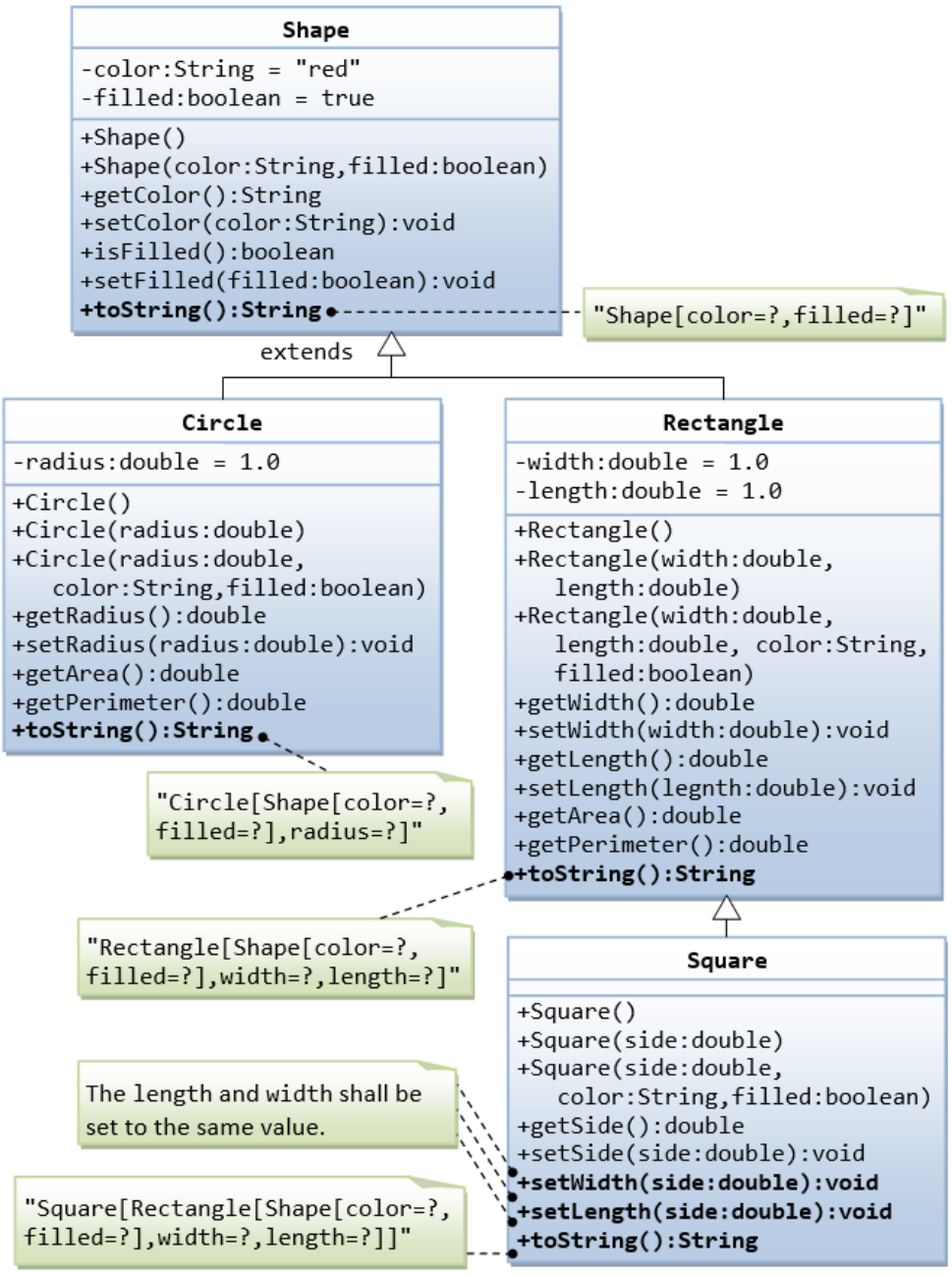

Write a superclass called Shape (as shown in the class diagram)
Write a test program to test all the methods defined in Shape.
Write two subclasses of Shape called Circle and Rectangle, as shown in the class diagram.
Write a class called Square, as a subclass of Rectangle. Convince yourself that Square can be modeled as a subclass of Rectangle. Square has no instance variable, but inherits the instance variables width and length from its superclass Rectangle.

- Provide the appropriate constructors (as shown in the class diagram).

Hints:

```
public Square(double side) {
   super(side, side);  // Call superclass Rectangle(double, double)
```

```
}
```

- Override the toString() method to return "A Square with side=xxx, which is a subclass of yyy", where yyy is the output of the toString() method from the superclass.
- Do you need to override the getArea() and getPerimeter()? Try them out.
- Override the setLength() and setWidth() to change both the width and length, so as to maintain the square geometry.

14. Exercises on Polymorphism, Abstract Classes and Interfaces

14.1 Ex: Abstract Superclass Shape and Its Concrete Subclasses

Rewrite the superclass Shape and its subclasses Circle, Rectangle and Square, as shown in the class diagram. Shape is an abstract class containing 2 abstract methods: getArea() and getPerimeter(), where its concrete subclasses must provide its implementation. All instance variables shall have protected access, i.e., accessible by its subclasses and classes in the same package. Mark all the overridden methods with annotation @Override.

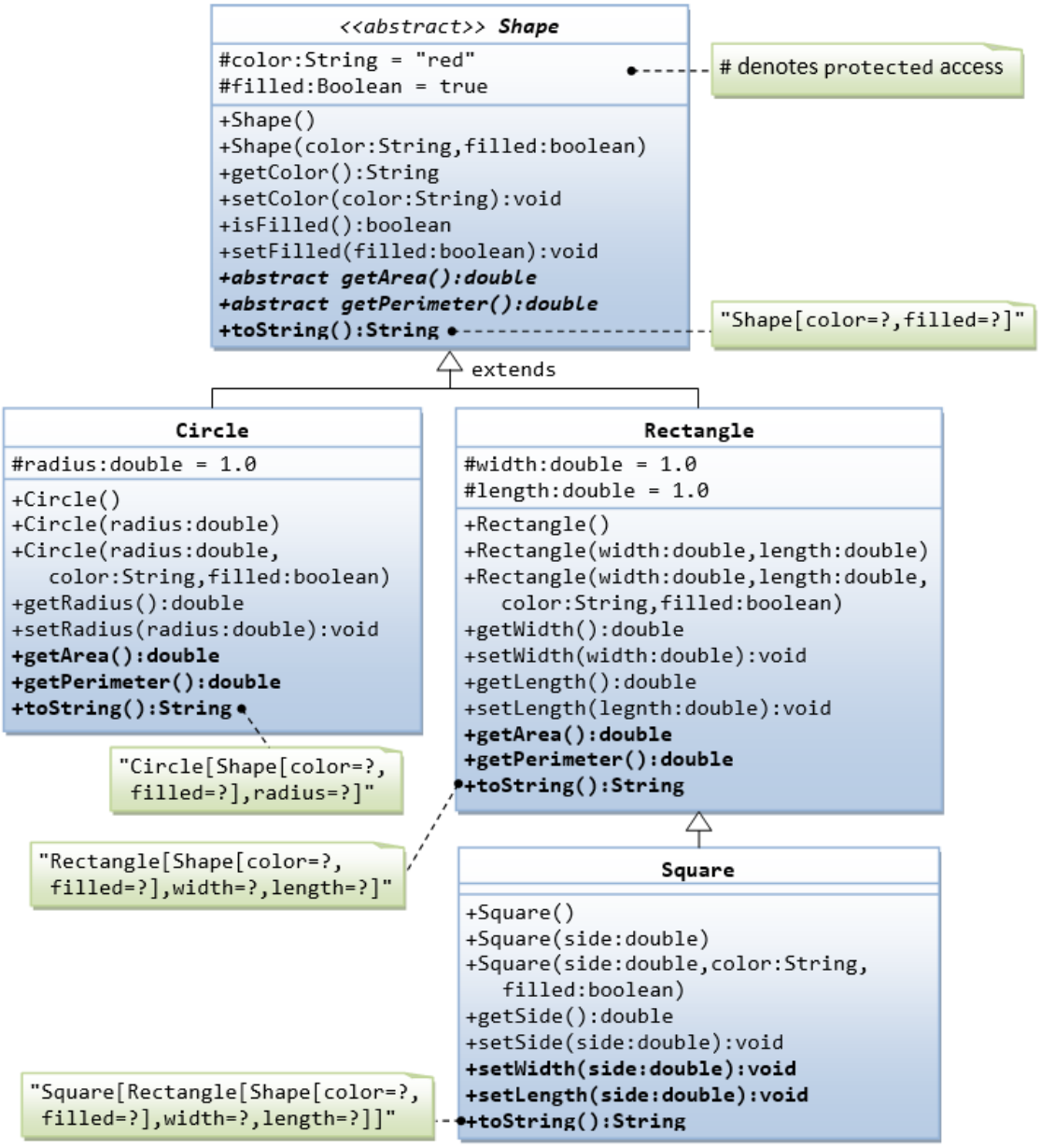

In this exercise, Shape shall be defined as an abstract class, which contains:

- Two protected instance variables **color(String)** and **filled(boolean).** The protected variables can be accessed by its subclasses and classes in the same package. They are denoted with a '#' sign in the class diagram.

- Getter and setter for all the instance variables, and toString().
- Two abstract methods getArea() and getPerimeter() (shown in italics in the class diagram).
- Subclasses Circle and Rectangle shall override the abstract methods getArea() and getPerimeter() and provide the proper implementation. They also override the toString().

Write a test class to test these statements involving polymorphism and explain the outputs. Some statements may trigger compilation errors. Explain the errors, if any.

```
Shape s1 = new Circle(5.5, "red", false);  // Upcast Circle to Shape
System.out.println(s1);                    // which version?
System.out.println(s1.getArea());          // which version?
System.out.println(s1.getPerimeter());     // which version?
System.out.println(s1.getColor());
System.out.println(s1.isFilled());
System.out.println(s1.getRadius());

Circle c1 = (Circle)s1;                    // Downcast back to Circle
System.out.println(c1);
System.out.println(c1.getArea());
System.out.println(c1.getPerimeter());
System.out.println(c1.getColor());
System.out.println(c1.isFilled());
System.out.println(c1.getRadius());

Shape s2 = new Shape();

Shape s3 = new Rectangle(1.0, 2.0, "red", false);   // Upcast
System.out.println(s3);
System.out.println(s3.getArea());
System.out.println(s3.getPerimeter());
System.out.println(s3.getColor());
System.out.println(s3.getLength());

Rectangle r1 = (Rectangle)s3;   // downcast
System.out.println(r1);
System.out.println(r1.getArea());
System.out.println(r1.getColor());
System.out.println(r1.getLength());

Shape s4 = new Square(6.6);     // Upcast
System.out.println(s4);
System.out.println(s4.getArea());
System.out.println(s4.getColor());
System.out.println(s4.getSide());

// Take note that we downcast Shape s4 to Rectangle,
//  which is a superclass of Square, instead of Square
Rectangle r2 = (Rectangle)s4;
System.out.println(r2);
System.out.println(r2.getArea());
System.out.println(r2.getColor());
System.out.println(r2.getSide());
System.out.println(r2.getLength());

// Downcast Rectangle r2 to Square
Square sq1 = (Square)r2;
System.out.println(sq1);
System.out.println(sq1.getArea());
```

```
System.out.println(sq1.getColor());
System.out.println(sq1.getSide());
System.out.println(sq1.getLength());
```

Try:

Explain the usage of the abstract method and abstract class?

14.2 GeometricObject Interface and its Implementation Classes Circle and Rectangle

Write an interface called GeometricObject, which contains 2 abstract methods: getArea() and getPerimeter(), as shown in the class diagram. Also write an implementation class called Circle. Mark all the overridden methods with annotation @Override.

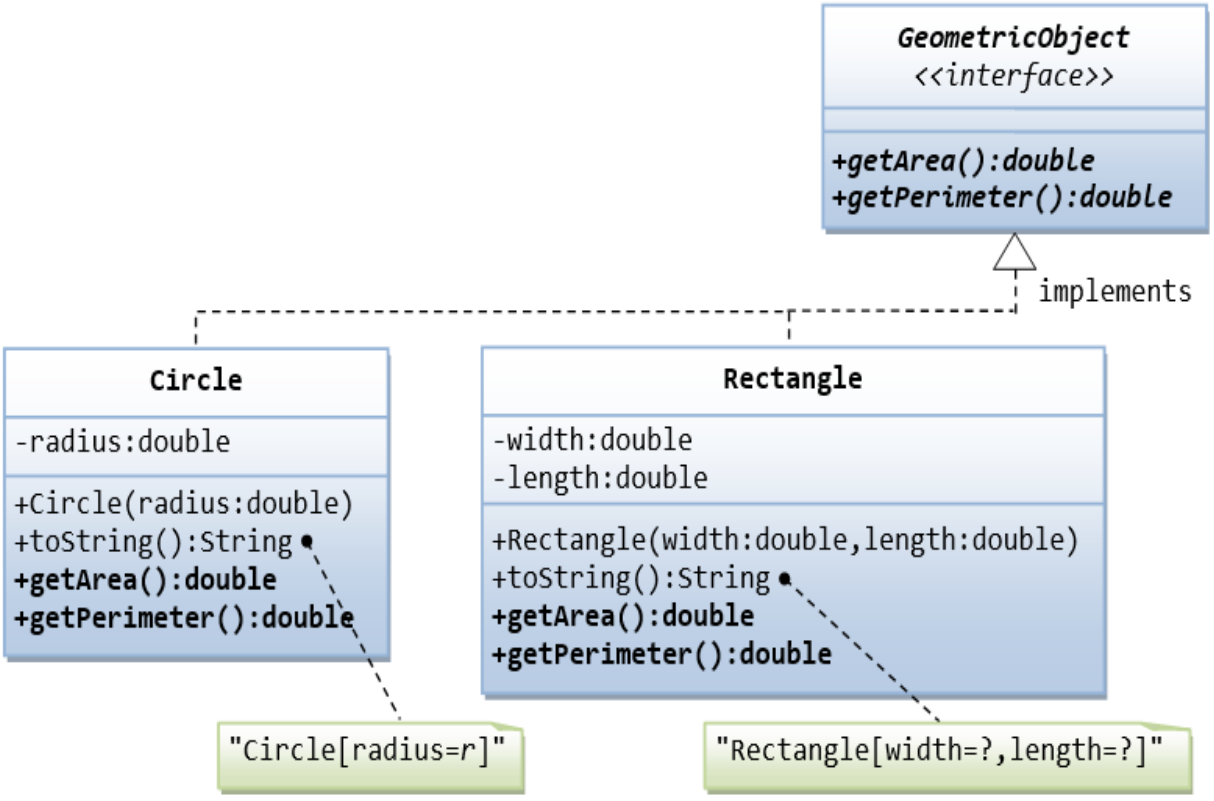

14.3 Ex: Movable Interface and its Implementation MovablePoint Class

Write an interface called Movaable, which contains 4 abstract methods moveUp(), moveDown(), moveLeft() and moveRight(), as shown in the class diagram. Also write an implementation class called MovablePoint. Mark all the overridden methods with annotation @Override.

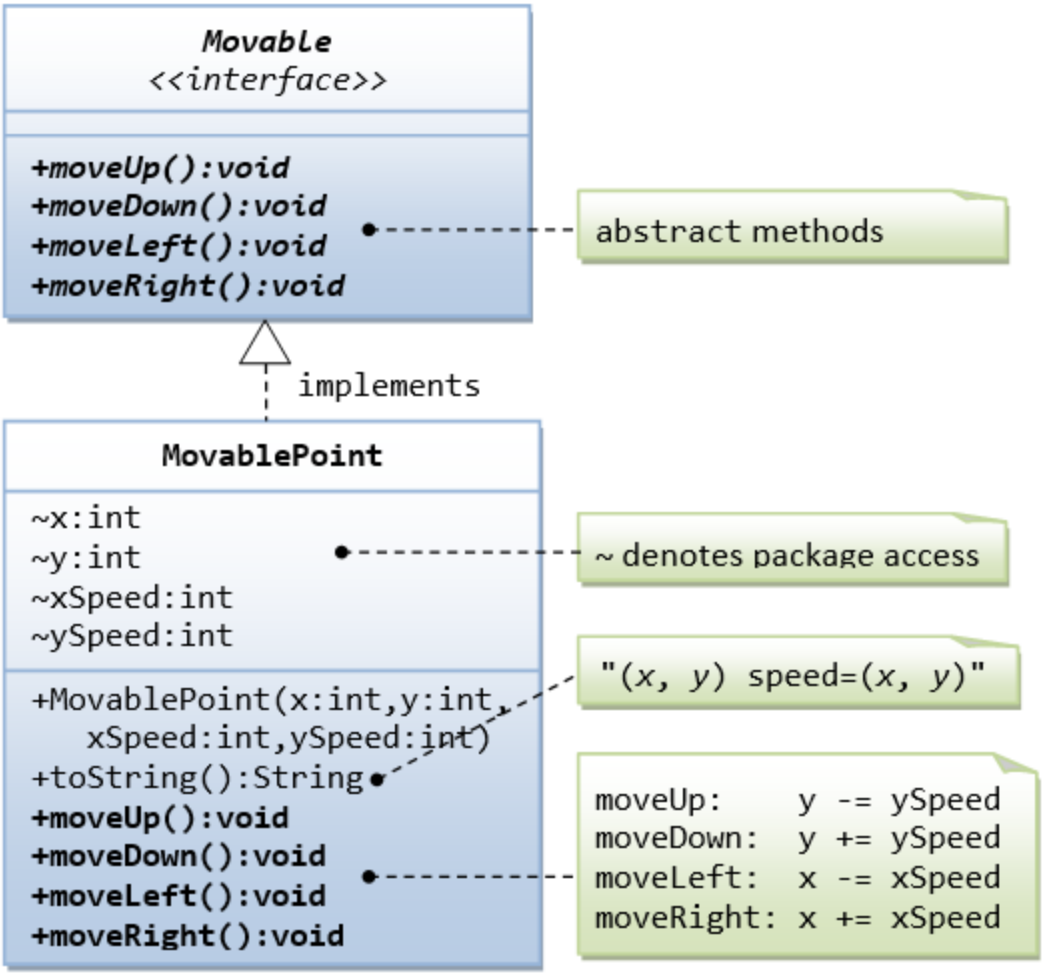

14.4 Movable Interface and Classes MovablePoint and MovableCircle

Write an interface called Movaable, which contains 4 abstract methods moveUp(), moveDown(), moveLeft() and moveRight(),
as shown in the class diagram.

Write the implementation classes called MovablePoint and MovableCircle. Mark all the overridden methods with annotation @Override.

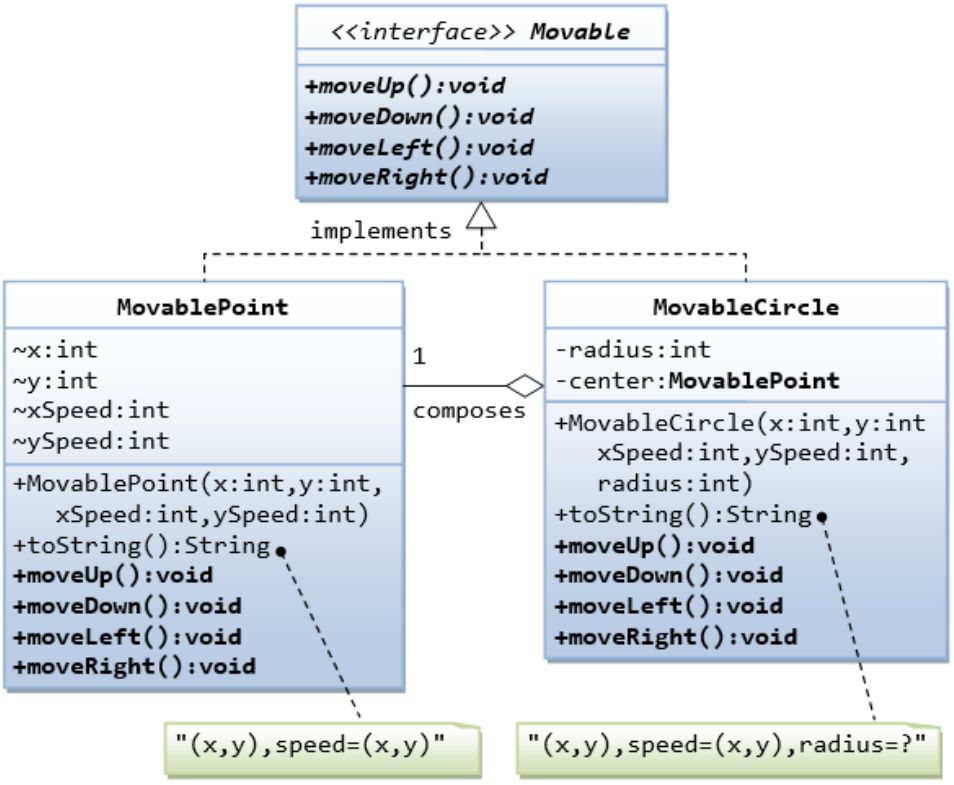

14.5 Interfaces Resizable and GeometricObject

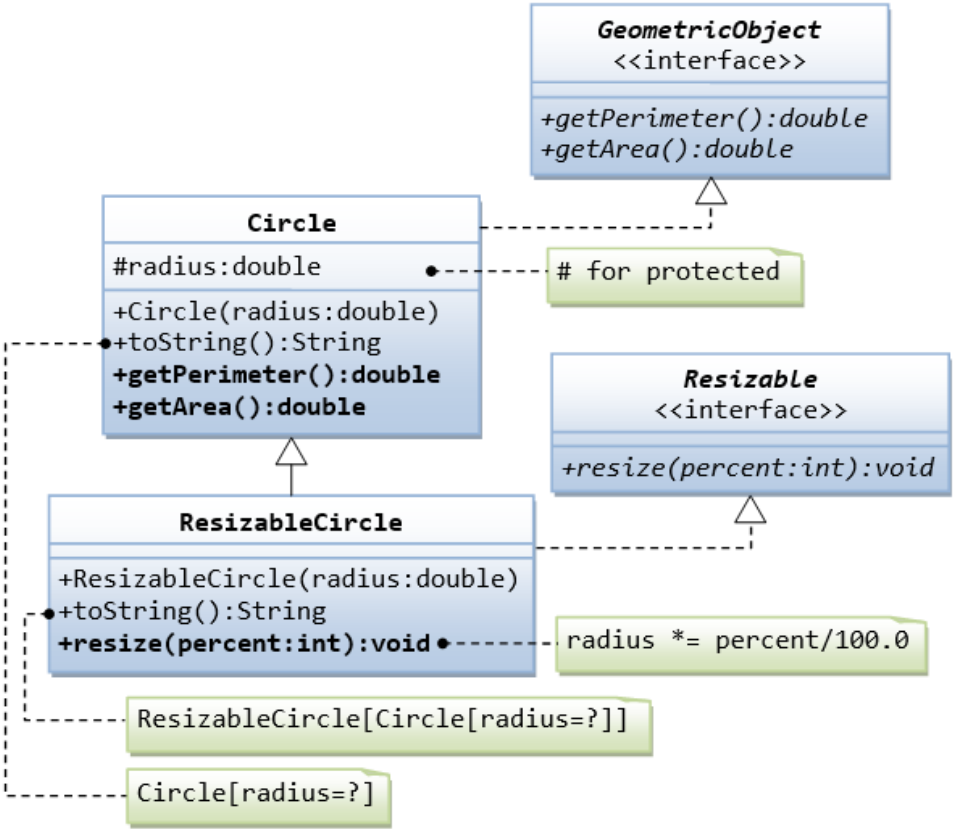

Write the interface called GeometricObject, which declares two abstract methods: getParameter() and getArea(), as specified in the class diagram.

Hints:

```
public interface GeometricObject {
   public double getPerimeter();
   ......
}
```

Write the implementation class Circle, with a protected variable radius, which implements the interface GeometricObject.

Hints:

```
public class Circle implements GeometricObject {
   // Private variable
   ......

   // Constructor
   ......

   // Implement methods defined in the interface GeometricObject
   @Override
   public double getPerimeter() { ...... }

   ......
}
```

Write a test program called TestCircle to test the methods defined in Circle.

The class ResizableCircle is defined as a subclass of the class Circle, which also implements an interface called Resizable, as shown in class diagram. The interface Resizable declares an abstract method resize(), which modifies the dimension (such as radius) by the given percentage. Write the interface Resizable and the class ResizableCircle.

Hints:

```
public interface Resizable {
   public double resize(...);
}
```

```
public class ResizableCircle extends Circle implements Resizeable {

   // Constructor
   public ResizableCircle(double radius) {
      super(...);
   }

   // Implement methods defined in the interface Resizable
   @Override
   public double resize(int percent) { ...... }
}
```

Try:

Write a test program called TestResizableCircle to test the methods defined in ResizableCircle.

14.6 Abstract Superclass Animal and its Implementation Subclasses

Write the codes for all the classes shown in the class diagram. Mark all the overridden methods with annotation @Override.

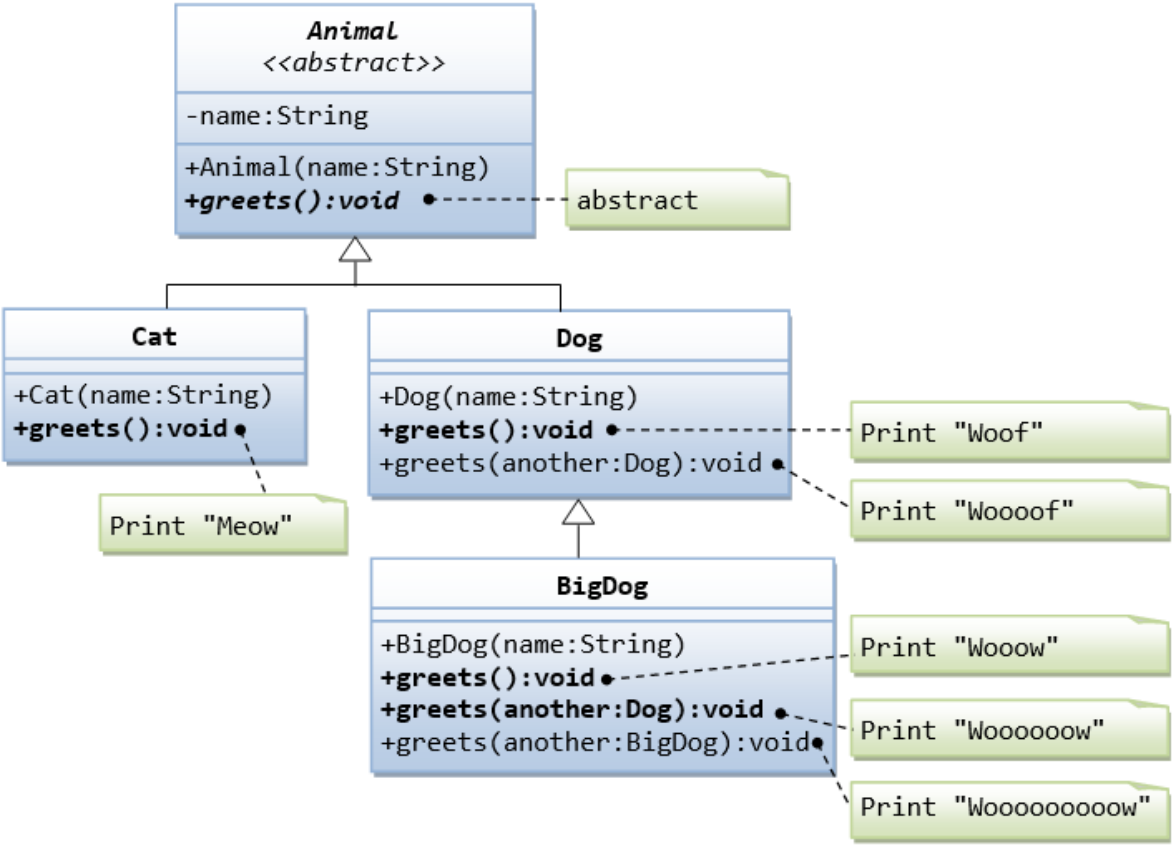

14.7 Another View of Abstract Superclass Animal and its Implementation Subclasses

Examine the following codes and draw the class diagram.

```
abstract public class Animal {
  abstract public void greeting();
}
```

```
public class Cat extends Animal {
  @Override
  public void greeting() {
    System.out.println("Meow!");
  }
}
public class Dog extends Animal {
  @Override
  public void greeting() {
    System.out.println("Woof!");
  }

  public void greeting(Dog another) {
    System.out.println("Wooooooooof!");
  }
}
```

```
public class BigDog extends Dog {
  @Override
```

```
  public void greeting() {
    System.out.println("Woow!");
  }

  @Override
  public void greeting(Dog another) {
    System.out.println("Wooooooowwwww!");
  }
}
```

Try:
Explain the outputs (or error) for the following test program.

```
public class TestAnimal {
  public static void main(String[] args) {
    // Using the subclasses
    Cat cat1 = new Cat();
    cat1.greeting();
    Dog dog1 = new Dog();
    dog1.greeting();
    BigDog bigDog1 = new BigDog();
    bigDog1.greeting();

    // Using Polymorphism
    Animal animal1 = new Cat();
    animal1.greeting();
    Animal animal2 = new Dog();
    animal2.greeting();
    Animal animal3 = new BigDog();
    animal3.greeting();
    Animal animal4 = new Animal();

    // Downcast
    Dog dog2 = (Dog)animal2;
    BigDog bigDog2 = (BigDog)animal3;
    Dog dog3 = (Dog)animal3;
    Cat cat2 = (Cat)animal2;
    dog2.greeting(dog3);
    dog3.greeting(dog2);
    dog2.greeting(bigDog2);
    bigDog2.greeting(dog2);
    bigDog2.greeting(bigDog1);
  }
}
```

15. Final Notes

The only way to learn programming is program, program and program on challenging problems. The problems in this tutorial are certainly NOT challenging. There are tens of thousands of challenging problems available – used in training for various programming contests (such as International Collegiate Programming Contest (ICPC), International Olympiad in Informatics (IOI)). Check out these sites:

- The ACM - ICPC International collegiate programming contest (https://icpc.global/)
- The Topcoder Open (TCO) annual programming and design contest (https://www.topcoder.com/)
- Universidad de Valladolid's online judge (https://uva.onlinejudge.org/).
- Peking University's online judge (http://poj.org/).
- USA Computing Olympiad (USACO) Training Program @ http://train.usaco.org/usacogate.
- Google's coding competitions (https://codingcompetitions.withgoogle.com/codejam, https://codingcompetitions.withgoogle.com/hashcode)
- The ICFP programming contest (https://www.icfpconference.org/)
- BME International 24-hours programming contest (https://www.challenge24.org/)

- The International Obfuscated C Code Contest (https://www0.us.ioccc.org/main.html)
- Internet Problem Solving Contest (https://ipsc.ksp.sk/)
- Microsoft Imagine Cup (https://imaginecup.microsoft.com/en-us)
- Hewlett Packard Enterprise (HPE) Codewars (https://hpecodewars.org/)
- OpenChallenge (https://www.openchallenge.org/)

Coding Contests Scores

Students must solve problems and attain scores in the following coding contests:

Name of the contest	Minimum number of problems to solve	Required score
CodeChef	20	200
Leetcode	20	200
GeeksforGeeks	20	200
SPOJ	5	50
InterviewBit	10	1000
Hackerrank	25	250
Codeforces	10	100
BuildIT	50	500
	Total score need to obtain	2500

Student must have any one of the following certifications:

- HackerRank – Java Basic Skills Certification
- Oracle Certified Associate Java Programmer OCAJP
- CodeChef - Learn Java Certification
- NPTEL – Programming in Java
- NPTEL – Data Structures and Algorithms in Java

V. TEXT BOOKS:

1. Farrell, Joyce.Java Programming, Cengage Learning B S Publishers, 8th Edition, 2020
2. Schildt, Herbert. Java: The Complete Reference 11th Edition, McGraw-Hill Education, 2018.

VI. REFERENCE BOOKS:

1. Deitel, Paul and Deitel, Harvey. Java: How to Program, Pearson, 11th Edition, 2018.
2. Evans, Benjamin J. and Flanagan, David. Java in a Nutshell, O'Reilly Media, 7th Edition, 2018.
3. Bloch, Joshua. Effective Java, Addison-Wesley Professional, 3rd Edition, 2017.
4. Sierra, Kathy and Bates, Bert. Head First Java, O'Reilly Media, 2nd Edition, 2005

VII. ELECTRONICS RESOURCES:

1. https://docs.oracle.com/en/java/
2. https://www.geeksforgeeks.org/java
3. https://www.tutorialspoint.com/java/index.htm
4. https://www.coursera.org/courses?query=java

VIII. MATERIALS ONLINE;

1. Syllabus
2. Lab manual

COURSE CONTENT

ENGINEERING CHEMISTRY LABORATORY								
I Semester: CSE / CSE (CS) / CSE (DS) **II Semester:** AE / ME / CE / ECE / EEE / CSE (AI&ML) / IT								
Course Code	**Category**	**Hours / Week**			**Credits**	**Maximum Marks**		
AHSD05	**Foundation**	**L**	**T**	**P**	**C**	**CIA**	**SEE**	**Total**
		-	-	3	1	40	60	100
Contact Classes: Nil	**Tutorial Classes: Nil**	**Practical Classes: 36**				**Total Classes: 36**		
Prerequisite: Basic Principles of Chemistry								

I. COURSE OVERVIEW:

The course encourages introducing analytical tools in an Engineering perspective. The course efforts to provide the basic knowledge of analytical methodology, outlines the importance of volumetric analysis, comprehensive instrumental analysis for properties of fuels, colorimetric analysis and spectroscopic analysis. This practical approach gives the essence of analytical chemistry for skill development in determinations of materials properties and its viability in the industry.

II. COURSES OBJECTIVES:

The students will try to learn:

I. The quantitative analysis to know the strength of unknown solutions by instrumental methods.
II. The troubles of hard water and its estimation by analytical techniques.
III. The applications of appropriate lubricant for finely tuned machinery.
IV. The basic knowledge on quantity of light absorbed by the materials.

III. COURSE OUTCOMES:

After successful completion of the course students should be able to:

CO1 Use conductivity meter and potentiometer for measurement of conductance and electromotive force of solutions

CO2 Examine the corrosion tendency in metals and its control by using inhibitor.

CO3 Make use of the principles of water analysis for domestic and industrial applications.

CO4 Demonstrate the characteristics of different fuels for finding the calorific value.

CO5 Use different types of lubricants to know its properties for the proper lubrication of machinery in industries.

CO6 Interpret the absorption tendency of solids or liquids by using colorimetry and spectroscopy techniques.

IV. COURSE CONTENT:

1. GETTING STARTED EXERCISES

1.1 Introduction to Chemistry Laboratory

The fundamental concepts and theories required for carrying out qualitative and quantitative analysis. Detailed explanation on the analytical techniques used for qualitative analysis. Emphasis on instrumental method of analysis and its advantages over conventional methods.

i. Types of analysis
ii. Difference between qualitative and quantitative analysis
iii. Common techniques of qualitative and quantitative analysis
iv. Introduction to instrumental method of analysis
v. Introduction to basic techniques and handling of common apparatus
vi. Discussion of Material Safety Data Sheet (MSDS) of chemicals
vii. Identification of toxic signs and safety procedures of chemical laboratory

1.2 Safety Guidelines to Chemistry Laboratory

The chemistry laboratory must be a safe place in which to work and learn about chemistry.

i. Wear a chemical-resistant apron.
ii. Be familiar with your lab work sheet before you come to lab. Follow all written and verbal instructions carefully. Observe the safety alerts in the laboratory directions. If you do not understand a direction or part of a procedure, ask the teacher before proceeding.
iii. When entering the laboratory room, do not touch any equipment, chemicals, or other materials without being instructed to do so. Perform only those experiments authorized by the instructor.
iv. If you take more of a chemical substance from a container than you need, you should not return the excess to the container. This might cause contamination of the substance remaining. Dispose of the excess as your instructor directs.
v. Never smell anything in the laboratory unless your teacher tells you it is safe. Do not smell a substance by putting your nose directly over the container and inhaling. Instead, waft the vapors toward your nose by gently fanning the vapors toward yourself.
vi. Do not directly touch any chemical with your hands. Never taste materials in the laboratory.
vii. Work areas should be kept clean and tidy at all times. Always replace lids or caps on bottles and jars.

1.3 Data recording and reports

Students must record their experimental values in the provided tables in this laboratory manual and reproduce them in the laboratory worksheets. Worksheets are integral to recording the methodology and results of an experiment. In engineering practice, the laboratory worksheets serve as a valuable reference to the technique used in the laboratory. Note that the data collected will be an accurate and permanent record of the data obtained during the experiment and the analysis of the results.

2. CONDUCTOMETRY

2.1 Determine the neutralization point between strong acid against strong base

i. **The basic principle of conductometric titrations**
ii. **Titration of unknown solution of acid with base**
iii. **Graphical plots on volume of titrant vs. conductance**

3. POTENTIOMETRY

3.1 Estimate the amount of Iron by using potentiometry

i. **The basic principle of potentiometric titrations**
ii. **Titration of Mohr's salt with potassium dichromate**
iii. Graphical plots on volume of titrant vs. potential

4. pH METRY

4.1 Determine the pH of the unknown solution by pH metry

i. **The basic principle of pH metry**
ii. **Titration of unknown solution with standard acid**
iii. Graphical plots on volume of titrant vs. pH to obtain equivalence point

5. ARGENTOMETRIC TITRATIONS

5.1 Determination of chloride content of water by argentometry

i. Principle of Argentometric titration.
ii. Titration of water samples by using EDTA to find the total hardness in water.

6. MEASUREMENT OF TOTAL DISSOLVED SOLIDS IN WATER

6.1 Measurement of total dissolved solids (TDS) in different water samples

i. **Specifications of potable water**
ii. Measure the total dissolved solids in different water samples by TDS meter

7. COMPLEXOMETRY METHOD

7.1 Estimate the total hardness of water by EDTA

i. **Principle of complexometric titration**
ii. Titration of water samples by using EDTA to find the total hardness in water.

8. BOMB CALORIMETER

8.1 Determine the calorific value of solid or liquid fuels using Bomb calorimeter

i. **Significance of bomb calorimeter**

ii. Combustion of solid or liquid fuels in bomb calorimeter to find its calorific value

9. VISCOSITY OF LUBRICANT

9.1 Determine the viscosity of the lubricants using Red Wood viscometer / Ostwald's viscometer

i. **The principle of viscosity of lubricant**

ii. Significance of viscosity index of lubricant

iii. Viscosity of given lubricant at various temperature by using Red wood viscometer

10. FLASH AND FIRE POINTS OF LUBRICANT

10.1 Determine the flash and fire points of lubricants

i. **Significance of flash and fire point of lubricant in industries**

ii. Flash and Fire points of a given lubricant by using Pensky Martens flash point apparatus

11. CLOUD AND POUR POINTS OF LUBRICANT

11.1 Determine cloud and pour points of lubricants

i. **Significance of cloud and pour point of lubricants in industries**

ii. Cloud and Pour points of a given lubricant by using cloud and pour point apparatus

12. COLORIMETRY

12.1 Estimate the metal ion concentration using colorimeter

i. Complexation of metal ion with ligands

ii. Detection of absorbance of the colored metal -ligand complex solution

iii. Graphical determination of concentration of the metal ions in the solution

13. SPECTROSCOPY

13.1Characterization of nanomaterials by UV-visible spectrophotometer

i. Synthesis of silver oxide nanomaterials

ii. Dispersion of nanoparticles in suitable solvent

iii. Determination of absorption edge of the nanoparticles using spectroscopic technique

V. TEXTBOOKS:

1. K. Mukkanti et al. *Practical Engineering Chemistry*, B.S. Publications, Hyderabad.
2. Vogel's, *Quantitative chemical analysis*, prentice Hall, 6th Edition, 2009.

VI. REFERENCE BOOKS:

1. Solanki, M. K. Engineering Chemistry Laboratory Manual. (Edu creation Publishing, 2019).
2. Jeffery, G. H. in TEXTBOOK OF QUANTITATIVE CHEMICAL ANALYSIS (ed John Wiley and Sons) (1989).
3. Gary-D-Christian, P. K. S. D., Kevin A. Schug. Analytical-Chemistry-by-Gary-D-Christian. 7 edn, Vol. 7 826 (Wiley, 2014).
4. Budinski, Kenneth G., Engineering materials: properties and selection, 5th edition, Prentice-Hall, 1996, pg.423.
5. Engineering chemistry by Jain & Jain, 17th Edition, ISBN:978-93-5216-641-1
6. Nitin K Puri, "Nanomaterials synthesis properties and applications" I K international publishing house Pvt Ltd, 1st Edition 2021.

7. B. Ramadevi and P. Aparna, S Chand publications, *lab manual for engineering chemistry*, S Chand publications, NewDelhi,1st Edition 2022.

VII. ELECTRONICS RESOURCES:

6. https://nptel.ac.in/translation
7. https://nptel.ac.in/courses/115105120
8. https://archive.nptel.ac.in/courses/122/101/122101001/#

VIII. MATERIALS ONLINE

1. Course Template
2. Laboratory Manual

COURSE CONTENT

ENGINEERING GRAPHICS								
I Semester: CSE / CSE(DS) / CSE(CS) **II Semester:** ECE / EEE / CSE (AI&ML) / IT								
Course Code	**Category**	**Hours / Week**			**Credits**	**Maximum Marks**		
AMED03	**Foundation**	**L**	**T**	**P**	**C**	**CIA**	**SEE**	**Total**
		0	1	2	2	40	60	100
Contact Classes: 15	**Tutorial Classes: Nil**	**Practical Classes: 30**				**Total Classes:45**		
Prerequisite: Fundamentals of Geometry								

I. COURSE OVERVIEW:

Introduction to graphical representation using free hand drawing and computer-aided drafting. Engineering graphics covers basic engineering drawing techniques such as lines & lettering, geometrical constructions, principles of tangency, orthographic projections, sectional views, and dimensioning. This course assists to draw 2D drawings for industrial applications.

II. COURSES OBJECTIVES:

The students will try to learn

1. The basic engineering drawing formats.
2. Projections of points, lines, planes and solids at inclinations of horizontal plane and vertical plane.
3. Use of computer-aided design (CAD) to communicate concepts and ideas in the design of three-dimensional engineering products.

III. COURSE OUTCOMES:

At the end of the course students should be able to:

CO1 Demonstrate an ability to dimension and annotate two-dimensional engineering graphics.
CO2 Demonstrate the freehand sketching to aid in the visualization process and to efficiently communicate ideas graphically.
CO3 Make use of CAD software for the creation of 3D models and 2D engineering graphics.
CO4 Comprehend the principles and techniques for creating sectional views of three-dimensional solids in engineering graphics.
CO5 Explain the application of industry standards and best practices applied in engineering graphics.
CO6 Apply the general projection theory with emphasis on orthographic projection to represent three-dimensional objects in two-dimensional views

IV. COURE CONTENT:

EXCERCISES ON ENGINEERING GRAPHICS

Note: Students are encouraged to bring their own laptops for laboratory practice sessions.

1. Getting Started Exercises

1.1 Introduction to AUTOCAD

AutoCAD is a widely-used computer-aided design (CAD) software application developed by Autodesk. It has been an industry standard for drafting and designing since its inception in the early 1980s. AutoCAD provides a versatile platform for creating and editing 2D and 3D drawings and models, making it an essential tool in various fields such as architecture, engineering, construction, manufacturing, and more.

i. Install AUTO CAD
ii. Purpose and Application
iii. Interface and Tools
iv. Precision and Accuracy
v. 2D and 3D Modeling
vi. Collaboration and Sharing
vii. Customization
viii. Industry Usage
ix. Versions and Licensing

1.1 Commands

The main purpose of using commands and shortcuts in AutoCAD boils down to increased productivity. They allow you to execute functions more quickly, as you don't need to search through the entire AutoCAD interface for the right tool. You can just type the command, and the function window appears.

i. Basic Drawing Commands
ii. Editing Commands
iii. Dimensioning Commands
iv. Advanced and Miscellaneous Commands

Basic Drawing Commands:

- Line (LINE): Draws straight line segments between two points.
- Circle (CIRCLE): Creates circles by specifying a center point and radius.
- Rectangle (RECTANGLE): Constructs rectangles by defining two opposing corners.
- Arc (ARC): Draws arcs based on different methods, such as specifying start, end, and radius or center, start, and angle.

Editing Commands:

- Erase (ERASE): Deletes selected objects from the drawing.
- Copy (COPY): Copies objects to a specified location.
- Move (MOVE): Relocates selected objects to a different position.
- Trim (TRIM): Cuts selected objects at the cutting edges defined by other objects.
- Extend (EXTEND): Extends objects to meet the boundaries of other objects.

Dimensioning Commands:

- Line Dimension (DIMLINEAR): Adds linear dimensions to objects.
- Aligned Dimension (DIMALIGNED): Creates dimensions aligned with an angle of the object.
- Radial Dimension (DIMRADIUS): Add radius dimensions to arcs and circles.
- Diameter Dimension (DIMDIAMETER): Creates diameter dimensions for circles.

Advanced and Miscellaneous Commands:

- Hatch (HATCH): Fills enclosed areas with a pattern or gradient.
- Offset (OFFSET): Creates parallel copies of objects at a specified distance.
- Block (BLOCK): Defines reusable blocks (collections of objects) in the drawing.
- Insert (INSERT): Inserts predefined blocks into the drawing.
- Viewport (VPORTS): Manages viewports for layout and plotting in paper space.

- Layer (LAYER): Manages layers for organizing and controlling object visibility.

TRY: Observe Exercise 1.1 in Solid works and in Creo software.

2. Introduction to Engineering Drawing

Engineering drawing, often referred to as technical drawing or drafting, is a graphical representation of an object, system, or structure used in various fields of engineering, manufacturing, and architecture. These drawings serve as a universal language that communicates design ideas, specifications, and instructions in a precise and standardized manner.

2.1 Basic Exercises

To be proficient in engineering drawing, basic exercises are required.

i. Identify the basic tools used for drafting
ii. Types of lines
iii. Arcs
iv. Circles

2.2 Practicing the standard lettering and numbering

Practicing standard lettering and numbering in engineering drawing is crucial for creating clear, professional, and easily understandable technical drawings. Proper lettering and numbering enhance communication and ensure that your drawings convey information accurately.

The following exercises are to be practiced to become proficient in lettering and numbering.

1. Use the correct fonts
2. Maintain uniformity
3. Lettering style
4. Height and spacing

Try: The following questions are to be answered in Solid works

1. How to use correct fonts in Solid Works
2. What are the commands are used to maintain uniformity of lettering and numbering.

3. Dimensioning

Dimensioning in engineering drawing is a crucial aspect that involves adding measurements and annotations to convey the size, location, and tolerances of objects, features, and components accurately. Proper dimensioning is essential for manufacturing, construction, and other engineering processes.

3.1 Exercises on Dimensioning

1. Understanding and use of the conventional dimensioning techniques.
2. Placing the dimension lines
3. Extension lines
4. Dimensions on angles

Hint: 1. The following Fig.3.1 shows the type of dimensioning on 2D drawing.

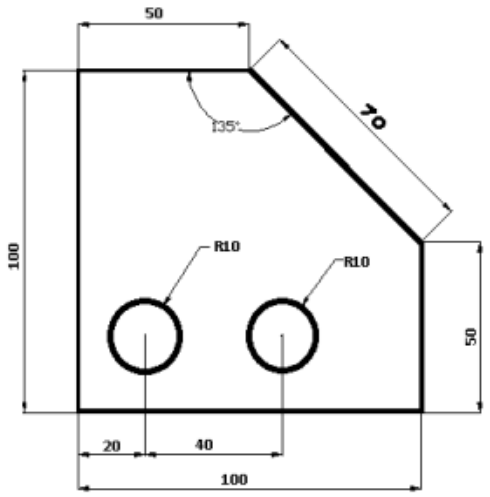

Fig.3.1 Dimensioning on 2D drawing

Hint: 2. The following Fig.3.2 shows the type of dimensioning on concentric circles.

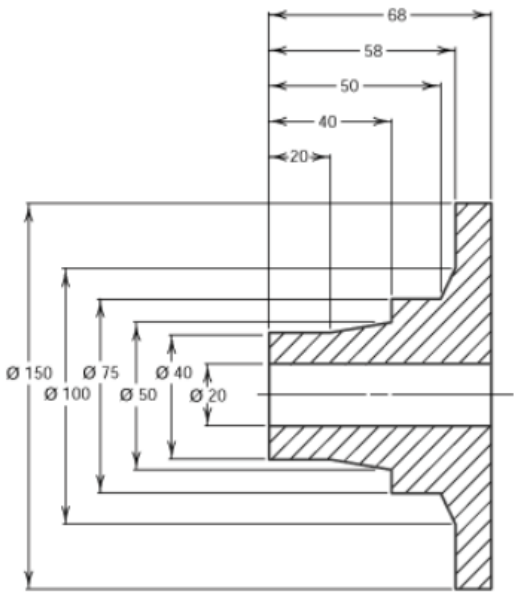

Fig.3.2 Dimensioning on Concentric circle

Try: Demonstrate the exercise 3 in Solid Works and CREO software.

4. Geometrical Constructions

Geometric construction is useful for learning how to use geometric tools like a ruler, compass, and straightedge to draw various angles, line segments, bisectors, and other forms of polygons, arcs, circles, and other geometric figures. Fig.4.1 shows the various geometric shapes to draw orthographic projections of lines, planes and solids.

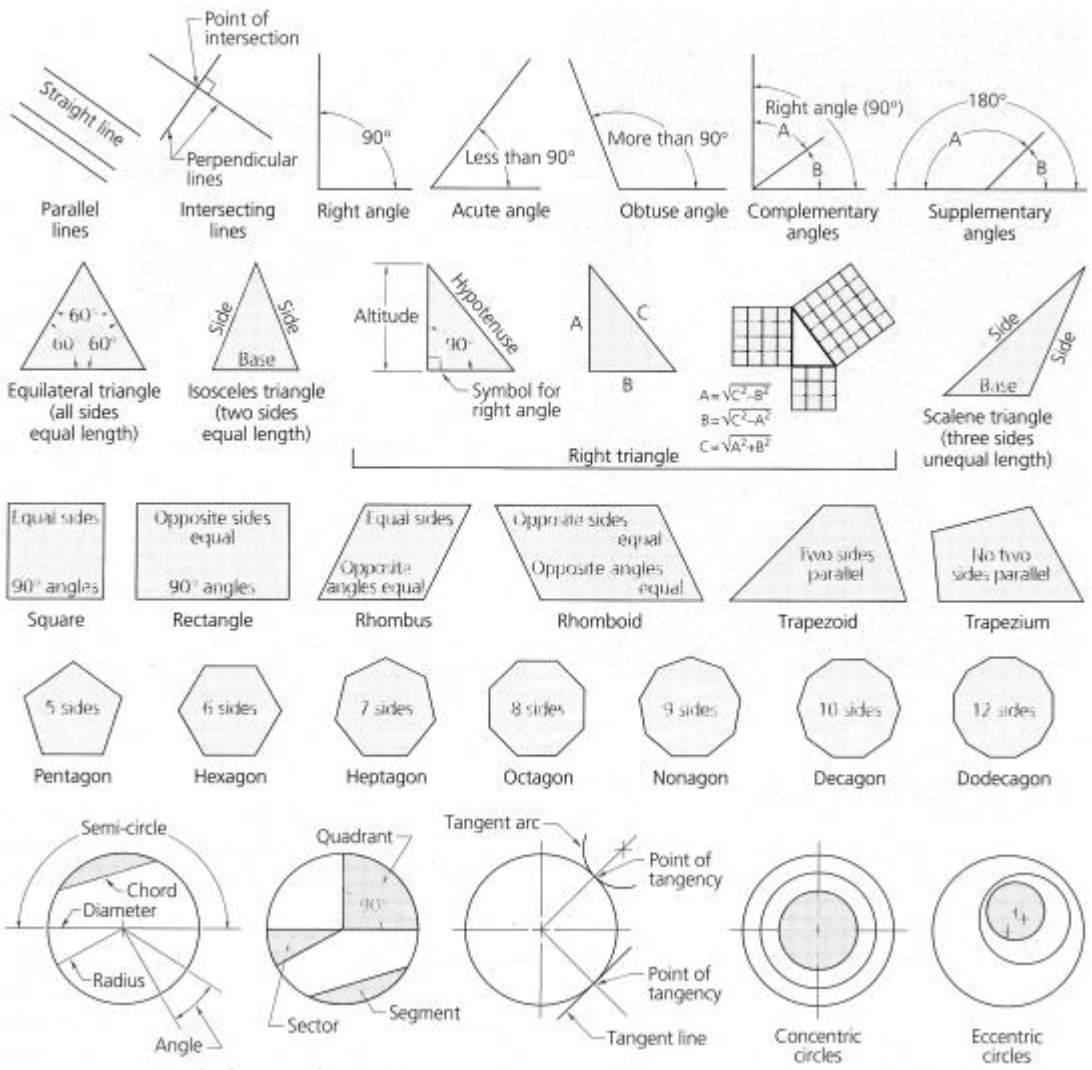

Fig.4.1 Geometric shapes

4.1. Exercises on Geometrical Constructions

To become proficient in engineering graphics geometrical constructions are required: Drawing lines, angles, triangle, square, pentagon, hexagon, octagon. Dividing line into equal or proportional parts. Drawing lines and arcs tangent to each other.

1. Divide a 16 cm straight line into a given number of equal parts say 5.
2. Divide a 8 cm line into 9 number of parts.
3. Bisect a given 45 degree sector.
4. Bisect a given straight line.
5. To draw a perpendicular to a given line from a point within it.
6. Construct a regular polygon, given the length of its side.

Hint: Dividing a line into equal number of parts

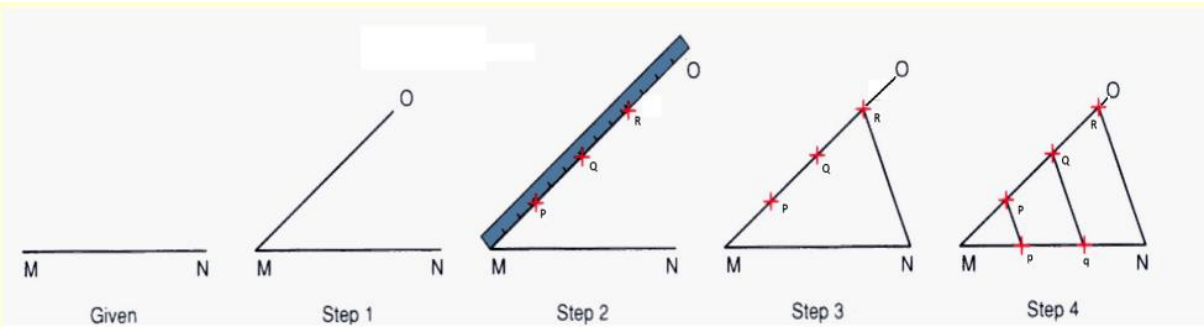

Try: The exercise 4 in Solid Works and CREO software.

5. Conic Sections

A conic section, conic or a quadratic curve is a curve obtained from a cone's surface intersecting a plane. The three types of conic section are the hyperbola, the parabola, and the ellipse.

5.1. Exercises on Conic Sections

1. Draw an ellipse with the distance of the focus from the directrix at 50mm and eccentricity = 2/3 (Eccentricity method)
2. Draw an ellipse with the distance of the focus from the directrix at 60mm and eccentricity = 2/3 (Eccentricity method)
3. Draw an ellipse with the distance of the focus from the directrix at 80mm and eccentricity = 2/3 (Eccentricity method)
4. Draw a parabola with the distance of the focus from the directrix at 50 mm (Eccentricity method).
5. Draw a parabola with the distance of the focus from the directrix at 40mm (Eccentricity method).
6. A vertex of a hyperbola is 60 mm from its focus. Draw two parts of the hyperbola; if the eccentricity is 3/2.
7. A vertex of a hyperbola is 50 mm from its focus. Draw two parts of the hyperbola; if the eccentricity is 1.5.

Try: The exercise 5 in Solid Works and CREO software.

6. Technical Sketching and Shape Description

6.1. Projections of planes and regular solids

1. Draw the projections of a regular pentagon of 30 mm side, having its surface inclined at 30° to the H.P. and a side parallel to the H.P. and inclined at an angle of 60° to the V.P.
2. Draw the projections of a regular hexagon of 40 mm side, having one of its sides in the H.P. and inclined at 60° to the V.P., and its surface making an angle of 45° with the H.P.
3. Draw the projections of a regular hexagon of 35 mm side, having one of its sides in the H.P. and inclined at 50° to the V.P., and its surface making an angle of 45° with the H.P.
4. Draw the projections of a regular pentagon of 40 mm side, having one of its sides in the H.P. and inclined at 30° to the V.P., and its surface making an angle of 45° with the H.P.

Try: The exercise 6.3 in Solid Works and CREO software.

7. Sectional views

A sectional view represents the part of an object remaining after a portion is assumed to have been cut and removed. The exposed cut surface is then indicated by section lines. Hidden features behind the cutting plane are omitted, unless required for dimensioning or for definition of the part.

7.1. Exercise on Sectional views of right regular solids, prism, cylinder, pyramid, cone.

1. A pentagonal pyramid, base 40 mm side and axis 60 mm long has its base horizontal and an edge of the base parallel to the V.P. A horizontal section plane cuts it at a distance of 20 mm above the base. Draw its front view and sectional top view.

2. A hexagonal prism, side of base 40 mm and height 70 mm is resting on one of its corners on the H.P. with a longer edge containing that corner inclined at 40° to the H.P. and a rectangular face parallel to the V.P. Draw the front view and sectional top view of the cut prism when a horizontal section plane cuts the prism in two equal halves. Draw the front view and sectional top view of the cut prism.
3. A pentagonal pyramid, base 40 mm side and axis 70 mm long has one of its triangular faces in the V.P. and the edge of the base contained by that face makes an angle of 40° with the H.P. Draw its projections.
4. Draw the projections of a cone, base 50 mm diameter and axis 75 mm long, lying on a generator on the ground with the top view of the axis making an angle of 45° with the V.P.

Try: The exercise 7.1 and 7.2 in Solid Works and CREO software.

8. Development of surfaces

Knowledge of development is very useful in sheet metal work, construction of storage vessels, chemical vessels, boilers, and chimneys. Such vessels are manufactured from plates that are cut according to these developments and then properly bend into desired shaped.

8.1. Exercise on Basics of development of surfaces

1. Draw the development of the lateral surfaces of a right square prism of edge of base 30 mm and axis 50 mm long.
2. Draw the development of the complete surface of a cylindrical drum. Diameter is 40 mm and height 60 mm.

8.2. Exercise on Development of surfaces of Prisms

1. A hexagonal prism of base side 20 mm and height 45 mm is resting on one of its ends on the HP with two of its lateral faces parallel to the VP. It is cut by a plane perpendicular to the VP and inclined at 30° to the HP. The plane meets the axis at a distance of 20 mm above the base. Draw the development of the lateral surfaces of the lower portion of the prism.
2. A hexagonal prism, edge of base 20 mm and axis 50 mm long, rests with its base on HP such that one of its rectangular faces is parallel to VP. It is cut by a plane perpendicular to VP, inclined at 45° to HP and passing through the right corner of the top face of the prism. (i) Draw the sectional top view. (ii)Develop the lateral surfaces of the truncated prism.
3. A pentagonal prism, side of base 25 mm and altitude 50 mm, rests on its base on the HP such that an edge of the base is parallel to VP and nearer to the observer. It is cut by a plane inclined at 45° to HP, perpendicular to VP and passing through the center of the axis. (i) Draw the development of the complete surfaces of the truncated prism.
4. A pentagonal prism of side of base 30 mm and altitude 60 mm stands on its base on HP such that a vertical face is parallel to VP and away from observer. It is cut by a plane perpendicular to VP, inclined at an angle of 50° to HP and passing through the axis 35 mm above the base. Draw the development of the lower portion of the prism.

Try : The exercise 8.1 and 8.2 in Solid Works and CREO software.

9. Exercise on Development of surfaces-2

9.1. Exercise on Development of surfaces of cylinder and cone

1. Draw the development of the lateral surface of the lower portion of a cylinder of diameter 50 mm and axis 70 mm when sectioned by a plane inclined at 40° to HP and perpendicular to VP and bisecting axis.
2. A Cone of base diameter 60 mm and height 70 mm is resting on its base on HP. It is cut by a plane perpendicular to VP and inclined at 30° to HP. The plane bisects the axis of the cone. Draw the development of its lateral surface.

9.2. Exercise on Development of surfaces of pyramid

1. Draw the development of the lateral surfaces of a square pyramid, side of base 25 mm and height 50 mm, resting with its base on HP and an edge of the base parallel to VP.
2. A square pyramid of base side 25 mm and altitude 50 mm rests on it base on the HP with two sides of the base parallel to the VP. It is cut by a plane bisecting the axis and inclined a 30° to the base. Draw the development of the lateral surfaces of the lower part of the cut pyramid.

3. A pentagonal pyramid side of base 30 mm and height 52 mm stands with its base on HP and an edge of the base is parallel to VP and nearer to it. It is cut by a plane perpendicular to VP, inclined at 40° to HP and passing through a point on the axis 32 mm above the base. Draw the sectional top view. Develop the lateral surface of the truncated pyramid.

Try: The exercise 9.1 and 9.2 in Solid Works and CREO software.

10. Orthographic views

Orthographic views are two-dimensional views of three-dimensional objects. Orthographic views are created by projecting a view of an object onto a plane which is usually positioned so that it is parallel to one of the planes of the object.

10.1. Exercise on Conversion of isometric view to orthographic projections using CAD

1. Draw the front view, side view and top view for the below Fig.10.1

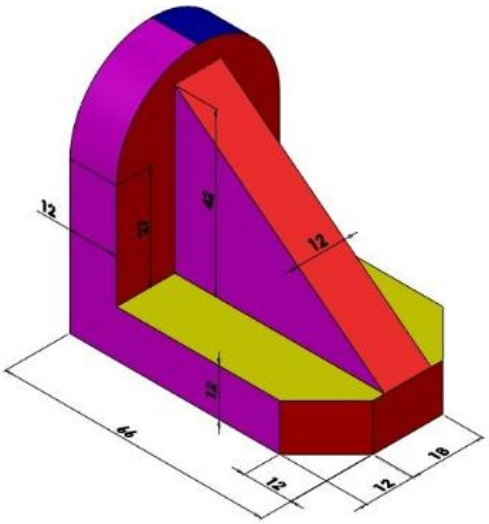

Fig.10.1

2. Draw the front view, side view and top view for the below Fig.10.2.

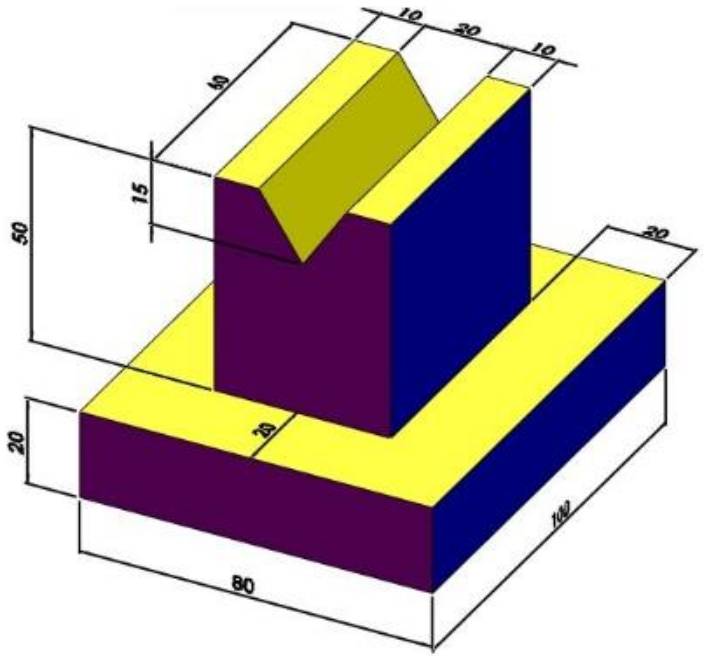

Fig.10.2

3. Draw the front view, side view and top view for the below Fig.10.3.

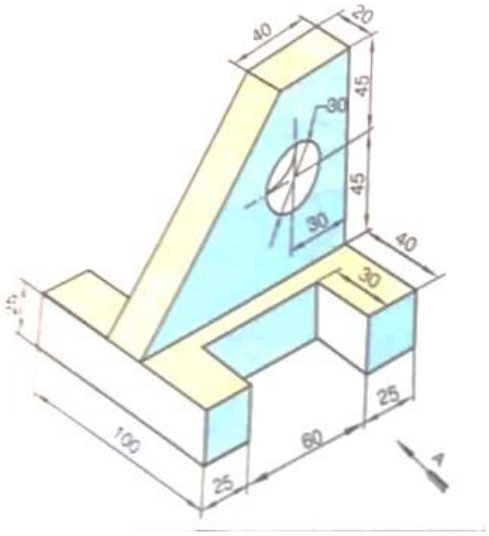

Fig.10.3

4. Draw the front view, side view and top view for the below Fig.10.4.

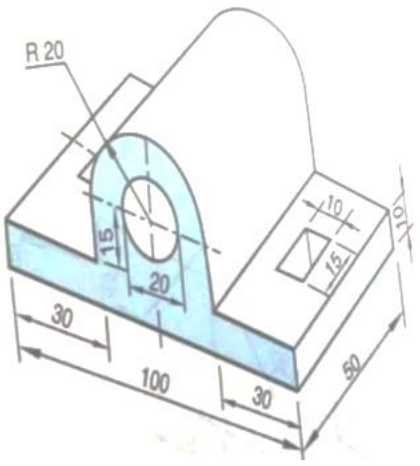

Fig.10.4

Try: Practice Exercise 10 in Solid Works

11. Isometric projection of planes

Isometric projection is a method for visually representing three-dimensional objects in two dimensions in technical and engineering drawings. It is an axonometric projection in which the three coordinate axes appear equally foreshortened and the angle between any two of them is 120 degrees.

11.1. Isometric scale

In engineering and technical drawing, an isometric scale is a method used to create an isometric projection of a three-dimensional object onto a two-dimensional surface, such as a drawing sheet or a computer screen. Isometric projection is a type of pictorial representation that shows an object in a three-dimensional view with all three principal axes (x, y, and z) at equal angles to the picture plane. An isometric scale is used to ensure that the dimensions and proportions of objects in the isometric drawing are accurate and maintain the proper relationships.

11.2. Exercise on Isometric projections of circle, square and rectangle and solids

1. Draw the isometric view of a circle of 60 mm diameter whose surface is parallel to the V.P.
2. Draw the isometric view of a square of side 60 mm whose surface is parallel to the H.P.
3. Draw the isometric view of a circle of 40 mm radius whose surface is parallel to the H.P.
4. Draw the isometric view of a square prism, side of the base 20 mm long and the axis 40 mm long, when its axis is i) Veritcal and ii) Horizontal.
5. Draw the isometric view of the semi-circle whose front view of its surface is parallel to the V.P.. The diameter of semi-circle is 60 mm.

Try : The exercise 11.2 in Solid Works and CREO software.

1. Isometric projections of solids

12.1. Exercise on conversion of orthographic view to isometric view using CAD

1. Draw the isometric view for the given orthographic views Fig.12.1

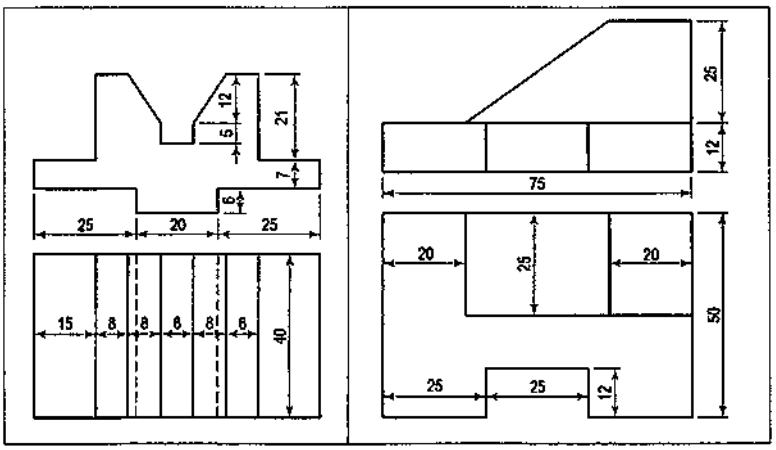

Fig.12.1

2. Draw the isometric view for the given orthographic views for Fig.12.2

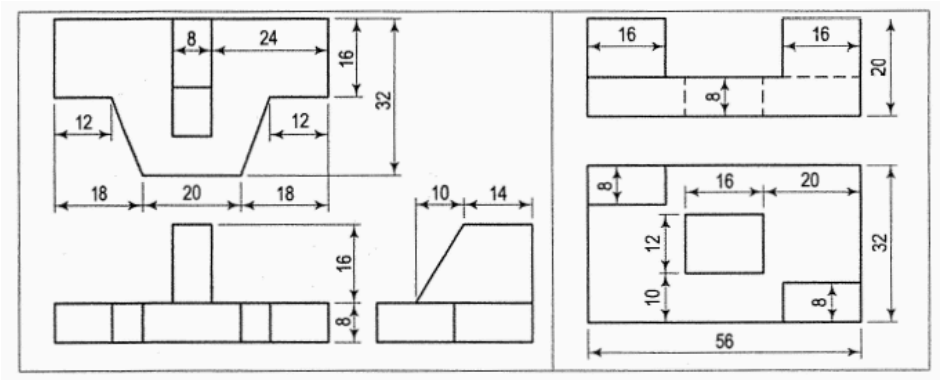

Fig.12.2

3.Draw the isometric view for the given orthographic views by assuming the dimensions for Fig.12.3

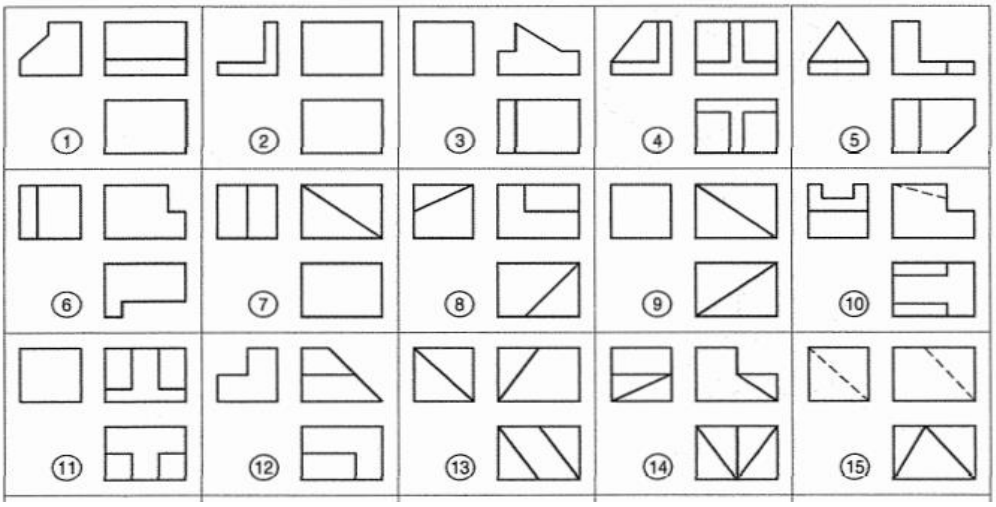

Fig.12.3

Try : The exercise 12 in Solid Works and CREO software.

13.Demonstration of SOLID WORKS Software

1. Introduction to SOLID WORKS
2. Demonstration of commands
3. 2D drawings

3. 3D drawings

14.Demonstration of CREO Software

1. Introduction to SOLID WORKS
2. Demonstration of commands
3. 2D drawings
3. 3D drawings

V. TEXT BOOKS:

1. Frederick E Giesecke, Alva Mitchell, Henry C Spencer, Ivan L Hill, John T Dygdon, James E. Novak, R. O. Loving, Shawna Lockhart, Cindy Johnson, *Technical Drawing with Engineering Graphics*, Pearson Education, 15th Edition, 2016.
2. Kulkarni D.M, Rastogi A.P. and Sarkar A.K., *Engineering Graphics with Auto CAD*. (Revised Edition), Prentice Hall India, New Delhi, 2011.
3. Donald Hearn, "*Computer Graphics*", 12th Edition, Pearson, 2021.

VI. REFERENCE BOOKS:

1. Basant Agrawal and C M Agrawal, *Engineering Drawing*, McGraw Hill, 3rd Edition, 2018.
2. James M. Leake, Molly Hathaway Goldstein, Jacob L. Borgerson, *Engineering Design Graphics, Modelling and Visualization*, Wiley, 3rd Edition, 2020.

VII. ELECTRONICS RESOURCES:

1. https://archive.nptel.ac.in/courses/112/103/112103019.
2. https://archive.nptel.ac.in/courses/112/105/112105294.

VIII. MATERIALS ONLINE:

1. Course Template
2. Laboratory manual

COURSE CONTENT

MOBILE APPLICATIONS DEVELOPMENT								
I Semester: Common for CSE / CSE(DS) / CSE(CS) **II Semester:** Common for CSE (AI&ML) / IT								
Course Code	**Category**	**Hours / Week**			**Credits**	**Maximum Marks**		
ACSD04	**Skill**	**L**	**T**	**P**	**C**	**CIA**	**SEE**	**Total**
		0	0	2	1	40	60	100
Contact Classes: Nil	**Tutorial Classes: Nil**	**Practical Classes: 45**				**Total Classes: 45**		
Prerequisite: Object Oriented Programming								

I. COURSE OVERVIEW:

This course focuses on hands-on experience in designing, developing, and testing mobile applications for various platforms. It helps to gain practical skills in mobile app development, including user interface design, memory management, input methods, data handling, network techniques and URL loading. Students will be able to undertake engineering challenges such as designing and developing mobile applications.

II. COURSES OBJECTIVES:

The students will try to learn

I. The mobile application development for different platforms using appropriate tools and frameworks.

II. The user interface design with best practices for usability and user experience.

III. The process of debugging and troubleshooting for common issues in mobile app development.

III. COURSE OUTCOMES:

At the end of the course students should be able to:

CO 1 Apply layout management and multi layout techniques to create adaptable user interface.

CO 2 Develop user interface for mobile application using widgets with event handling.

CO 3 Design push notifications for incoming messages.

CO 4 Create mobile application models using appropriate range of methods provided.

CO 5 Evaluate applications on mobile platforms with different configurations.

CO 6 Deploy applications to the android marketplace for distribution to app store.

IV. COURSE CONTENT:

GETTING STARTED AN EXCERCISES

1.1 HELLOWORLD

4. Flutter and Kotlin are the two leading technologies used to build mobile applications. Kotlin has an easy learning curve because it is very similar to Java. In Flutter, developers must have to learn Dart programming to build an app.
5. In this laboratory students can use either kotlin / flutter.
6. Install Android studio, visual studio with kotlin / flutter on your machine.
7. Write a Hello-world program using android studio and kotlin / flutter source-code editor.

1. 2. FOOD ORDERING APPLICATION

Build a food ordering application with the following functionalities:

1. A 'Welcome page' which displays the logo and/or name of the app.
2. A 'Login Page' which asks for users' mobile number and password.
3. A 'Registration Page' which enables users to sign up for the app.
4. A 'Forgot Password Page' which enables users to reset their password.
5. A 'Navigation Drawer' with the app logo and user name on top and menu options to open the following pages:
    a. Home
    b. User Profile
    c. Favorite Restaurants
    d. Order History
    e. Frequently Asked Questions (FAQs)
    f. Log out
6. A 'My Profile' page (where the user's name, phone number, and address is displayed).
7. A 'Favorites' page (where the list of all favorite restaurants is displayed).
8. An 'Order History' page which lists the previously placed orders of the user.
9. An 'FAQ' page which lists some frequently asked questions. You can create any random questions which you feel could be relevant for a food delivery application. (Min. 5 questions)
10. A 'Logout' functionality which takes the user to the login page.
11. A 'Restaurant Details' page which displays the menu items of that particular restaurant, each item's price and the option to add an item to cart.
12. A 'Cart' page which lists the items added to cart and the total amount to be paid.

See also for authentic understanding, click the link **https://www.swiggy.com; https://www.zomato.com/deliver-food; https://www.ubereats.com; https://www.dineout.co.in and so on. Each student has to refer any one of the web sites stated above.**

2. MUSIC PLAYER APPLICATION

Build a music player application with the following functionalities:

1. A 'Splash screen' (gradient background and app logo in center)
2. A 'Navigation drawer' with app logo section at the top along with links to 'All Songs', 'Favorites', 'Settings' and 'About Us'.
3. An 'All songs' screen (where of list all the tracks fetched from offline storage are displayed and user can sort the tracks by name or recently added). This will the home screen of the app.
4. The app should be able to fetch and play .mp3 and .wav files.
5. A 'Favorites' screen (where list of all the favorite songs is displayed)
6. A 'Settings' screen (where the 'Shake to change song' feature can be enabled or disabled)

7. An ‘About us’ screen (where we will display information about the app developer and the app version)
8. A ‘Now playing’ screen with following features:
    a. Track title and track artist
    b. Play / Pause button
    c. Next button
    d. Previous button
    e. Shuffle button
    f. Loop button
    g. Seek bar
    h. Mark track as favorite or unfavorite it
    i. Third party visualizer in upper half background
    j. A ‘Back to list’ button in the header which should take the user to the screen he came from (kind of like back button behavior).
    k. Shake to change song
9. A ‘Now playing’ bar at the bottom with name of the track playing and play or pause feature. This would appear if the user has moved from ‘Now playing’ screen to ‘All songs’ screen or ‘Favorites’ screen without pausing the track.
10. Background play. The app will continue playing the track if the app gets closed (not killed) without the music being paused.
11. A notification saying "A track is playing in the background" only if the app gets closed (not killed) without the music being paused.

Primary color scheme: #9b2a58, #00032a

See also for authentic understanding, click the link **https://open.spotify.com; https://gaana.com; https://www.hungama.com; https://wynk.in/music and so on. Each student has to refer any one of the web sites tated above.**

3. SMART HEALTH PREDICTION

Build Android Smart Health Prediction application which can be used by all patients or their family members who need help in emergency with the following functionalities:

This application comprises of 3 major modules with their sub-modules:

1. A 'User page' with menu options to open the following pages:
    a. A 'Patient Login page' which displays patient Login to the application using his ID and Password.
    b. A 'Patient Registration page' which asks if patient is a new user, he will enter his personal details and he will user Id and password through which he can login to the application.
    c. A 'My Details page' which patient can view his personal details.
    d. A 'Disease Prediction page' patient will specify the symptoms caused due to his illness. Application will ask certain question regarding his illness and application predict the disease based on the symptoms specified by the patient and application will also suggest doctors based on the disease.
    e. A 'Search Doctor page' which the patient can search for doctor by specifying name, address or type.
    f. A 'Feedback page' which the patient will give feedback this will be reported to the admin.
    g. A 'Notification page' which the user needs to enter his/her prescription and then the user need to select a time on which he/she wants to receive notification. The application will send the notification regarding the prescribed medicine to the user on their device.

2. A 'Doctor page' with menu options to open the following pages:
    a. A 'Doctor Login page' will access the application using his User ID and Password.
    b. A 'Patient Details page' can view patient's personal details.
    c. A 'Patient's Previous Details page' will get all information about patient's previous case history. That will help him to serve him better.

3. A 'Admin page' with menu options to open the following pages:
    a. A 'Admin Login page' can login to the application using his ID and Password.
    b. A 'Add Doctor page' can add new doctor details into the database.
    c. A 'Add Disease page' can add disease details along with symptoms and type.
    d. A 'View Doctor page' can view various Doctors along with their personal details.
    e. A 'View Disease page' can view various diseases details stored in database.
    f. A 'View Patient page' can view various patient details who had accessed the application.
    g. A 'View Feedback page' can view feedback provided by various users.

See also for authentic understanding, click the link **https://www.apollohospitals.com; https://nirogstreet.com; https://www.lybrate.com**; **https://www.portea.com and so on. Each student has to refer any one of the web sites stated above.**

4. HOSTEL MANAGEMENT APPLICATION

Develop the hostel management application which will help to manage the hostel. The hostel managers can keep track of the hostellers' in and out timings and their daily entries. This system is intended to help hostel admin by allowing them to save student records and information about their rooms. It helps the admin from the manual work from which it is very difficult to find the record of the students.

This application comprises of following functionalities:

1. A 'Admin page' with menu options to open the following pages:
    a. A 'Manage Rooms' page which the admin can choose to add general rooms or bedrooms to the system. If the admin chooses a bedroom, they can add beds. They can add, update or delete rooms.
    b. A 'Manage Students' page which the admin can view, add, update or delete students from the system. They can allocate rooms to the students. Also, they can view the attendance of a student.
    c. A 'View Attendance' page which the admin can filter by date AND room OR student-id. They can view all the student's attendance.

2. A 'Student page' with menu options to open the following pages:
    a. A 'Login' page which the student can log in to the system using a username and password.
    b. A 'Profile' page which t he student can add or update their profile details.
    c. A 'Change Password' which they can also change their password to the new one.

d. A 'Home' page the student can scan the QR Code and a log will be added. They can view their room allocation details.
e. A 'View Attendance' page the students are able to view only their attendance, they can also filter it by date.

3. A 'Guardian page' which the ward wishes to go out from campus for any purpose, the guardian will login through the registered login then the guardian will send the permission request to warden's android phone by specifying the purpose and also duration. After successful sent, the message is available in the warden login for further action.
4. A 'Warden page' after receiving the guardian's message, warden has a choice with options approve and reject. Based on the purpose of out campus, Warden Selects approve or reject. If approves then the message with the ward details is sent to security check which indicates the request made by the guardian is permitted.

See also **for** authentic understanding, click the link **https://www.hostelsnap.com; http://www.ifnoss.com/edu/college-university-software/hostel-management-system.aspx; https://www.ezeetechnosys.com/absolute; https://www.resbird.com and so on. Each student has to refer any one of the web sites stated above.**

5. STAY SAFE WOMEN SECURITY APPLICATION

Build stay safe women security project is used to provide highly reliable security system for the safety of women. The proposed system is based upon advanced sensors and GPS. The basic aim of the system is to develop a low-cost solution for GPS based women tracking system (Women Safety System). The main objective of the system is to track the current location of the person which has an android enabled mobile by extracting the longitude and latitude of that target person.

This application comprises of following functionalities:

1. A 'Scream Alarm' page used perfect for the females as well as other users that need some kind of safety alarm in case, they found out that someone is following or stalking them. It also consists of two other types of scream alarm. It's an initial distraction which will buy some time and allow the user to escape from the trouble.

    a. Male voice scream
    b. Police siren.

   The user could select one of his/her choice from the "Settings" of the application, as keeping in mind the two other scream alarms are also added in this application as nowadays safety and security is everybody's concern.

2. A 'Fake Call Timer' page which the fake call timer allows the user to make fake calls in the time of need. It helps user to escape from an undesirable situation citing an important call from anyone who needs him/her urgently and rest depends upon user creativity. This feature also helps the user to escape from boring social events

In order to make a fake call the user have to select the "Fake Call" icon and after that user could write any name from which he/she wants a fake call. User could also set up the timer as per the requirement. The user could also set the default timer from the "Settings" icon of the application.

In a critical situation, the user just has to long term press the fake call button and automatically get a fake call as per the desired selected timer in the settings.

3. A 'Where Are You' which is used to find track friend. While first request is send by the sender. The sender will have to select the "Where Are You" icon and then a new dialog box of "Pick a Friend" will open up. The sender could select any friend and the request will be sent to the receiver. The receiver will accept that request from their end and a message will be sent to the receiver with the present location of the user.

4. A 'Track Me' which will track the user to view the exact dynamic location of the victim. First user have to send the Track Me request at the receivers end. The receiver will accept the request and then his/her name will appear on the friends you are tracking on the bottom of the application. The user could select that friend from there and then it will get automatically re-directed to the Google maps from where the user could view the exact location of the victim and also where's he/she heading to.

5. A 'Friends List' page which shows all the contact numbers of family and friends which are added by the user through contacts. This could be done by selecting the contact icon on the bottom right corner of the friends list.

6. A 'Settings' page which consists of the following features -:

    a. A 'Emergency Services' page allows the Stay Safe Application to send emergency notifications and SMS with the exact location to the emergency contacts.
    b. A 'Low Battery Alert' page alert feature allows the Stay Safe Application to send low battery alert

and SMS to the emergency contacts.

c. A 'Set Scream Sound' page which the user could select any scream sound as per the requirement.
d. A 'Fake Call Timer (On Long press)' page which the user could set the fake call default timer as per the requirement.

7. A 'Emergency Distress Signal (SOS)' which the distress signal will be generated by the user in case of an emergency. In order to generate the distress, signal the user have to shake up his/her phone, then a distress signal will appear at the user end with a default timer of 5 sec. In the end distress signal will be sent to the emergency contacts added by the user at the time of registration. The application sends SMS and user details as well as the exact location of the user through a push notification at the receiver end, before sending a distress signal the user first have to turn on the emergency services from the settings of the application.

When user launches the application in his/her Android phone, the very first screen which lands is the Login Screen. First the user have to register himself by entering the details as the respective name and contact number of the user.

See also for authentic understanding, click the link **https://womensafetywing.telangana.gov.in; https://nirbhayaapp.com; https://safetipin.com; https://www.smart24x7.com and so on. Each student has to refer any one of the web sites stated above.**

6. CONTROLLING ANTI RAGGING APPLICATION

Controlling anti ragging system facilitate college students to register a criticism in opposition to ragging immediately. Students would be required to log in, after which they would be capable to register their complaints. The grievance will then be dispatched to the worried authorities for well-timed action and the motion will be initiated immediately. Previous archives reveal that well timed action was once taken in every case, which in flip resulted in a fall in such cases. Now, with the launch of the app, the Ministry hopes to wipe out the exercise completely.

This application comprises of following functionalities:

a. A 'User Module' page which the person can register with the machine then he/she will get the get entry to in the app. After login done if the any ragging is happened then without delay update the details. Every other flexibility is additionally on hand right here to contact the emergency wide variety also provided.
b. A 'College Admin' page which can operate the action on the failed complaints; complaints can be considered via the admin and can take the perfect action on the complaint.
    a. A 'Add Complaint' page users can a make complaint against ragging. In this, those who are filling complaint as to fill some fields like Accused Name, Ragging Type, Mobile Number
    b. A 'View Complaint' page which can view the complaints made by students.

See also for authentic understanding, click the link http://www.amanmovement.org; **https://www.nmc.org.in/ActivitiWebClient/open/initiateAntiRaggingHome; https://www.antiragging.in; https://www.amanmovement.org/raggingmain.html and so on. Each student has to refer any one of the web sites stated above.**

7. EXTRACURRICULAR EVENT TRACKING APPLICATION

Build Extracurricular activities are sources that have long been a part of the educational system; students participate in these activities, which are not part of the standard curriculum or teaching techniques. Participation in all of these activities, or even just one of them has been linked to social and academic success. Students who engage in extracurricular activities gain from the numerous options available to them. Having better grades, higher standardized test scores and educational attainment, attending school more consistently, and having a greater self-concept were all advantages of participating in extracurricular activities.
Our Extracurricular Event Tracking System is developed to track students' hours organizing and participating in cultural events and college fests. This system keeps students updated about upcoming events and maintains track of the events they have attended and the hours they have spent organizing various cultural programs. Thereby, encouraging participation.

This application comprises of following functionalities:

1. A 'Admin' page which contains the following features:
    a. A 'Login' page which the admin can log in using their credentials.
    b. A Manage Course which they can add, update, view and delete courses. The courses will be BSC/MSC/Diploma/Engineering, etc. They can add total hours.
    c. A 'Manage Students' page which the admin can add, update, view and delete students. They can assign courses to the students.

d. A 'Manage Events' page which the admin can add, update, view and delete events. They can add details about a particular event. They can choose courses. They can add the link to the Meet.
e. A 'View Records' page which to view the records, the admin can choose by course. They can view the students' list and list of records.

2. A 'Student' page which contains the following features:
   a. A 'Login' page which the students can log in using their credentials.
   b. A 'Dashboard' page which the students can see the hours completed or the total hours. They can see up to 5 upcoming events ordered by date and time.
   c. A 'Calendar' page the students can see the Day/Week/Month on the Calendar.
      - Day: The system will show today's events on the date. The user can also select any previous date to check any events that happened on that day.
      - Week: By selecting any week, the system will show one week's dates & events.
      - Month: By selecting the month, the system will show the current month's dates and events.
   d. A 'Records' page which the system will show all the events attended.
   e. A 'Profile' page which the user can view their profile and change the password.
   f. A 'Forgot Password' page which if the user forgets their password, an OTP will be sent via Email or Phone number (Any 1). They would require to enter the correct OTP and reset the password.
   g. A 'Notification' page which the system will send a notification to the user before an event starts, and the dashboard checks the event unattended or hours not completed.

See also for authentic understanding, click the link
https://www.k12.com/parent-student-resources/extracurriculars-events,
https://www.tes.com/for-schools/clubs-and-events/features,
https://www.london.edu/masters-degrees/activities-clubs-and-groups,
https://prepory.com/blog/best-extracurricular-activities-for-the-engineering-applicant and so on.
Each student has to refer any one of the web sites stated above.

8. STUDENT MANAGEMENT SYSTEM

Build a student management system will have data on every student, and check the daily attendance of every student. The system comprises 3 major modules with their sub-modules as follows:

1. The 'Admin' page menu options to open the following pages
   a. A 'Login' page the admin can log in to the system using a username and password.
   b. A 'Manage Students' page the admin can manage student details and they can add, update and delete details. Also, add a fingerprint while adding the student's details.
   c. A 'Manage Teacher' page admin will also add teacher's details and add, update and delete details. Teachers will be assigned subjects.
   d. A 'Manage Grades' page can manage students' grades and add, update or delete grades.
   e. A 'Manage Subjects' page can also manage subjects by adding, updating and deleting subjects.
   f. A 'Manage Appointments' page applies to meet parent and waits for a reply.
   g. A 'Appointments' page parents applied to meet the teacher/admin. The admin will respond to the parent's appointment request.
   h. A 'Manage Leaves' page able to manage pending and past student leave. They can view a list of all the applied student's leaves. The admin can view all the pending leaves applied by parents. The admin will approve or reject the leave application. Leave Note: They will be able to send a note to the parent related to leaves.
   i. A 'Medical Certificate' page will be able to view the medical certificate submitted by parents. They can send a note with an acknowledgement in response.
   j. A 'View Complaint' page can view pending and replied complaints. They will be able to respond to the complaints.
   k. A 'Warning Letters' page contains the admin can add and view a list of all students with attendance below 80% / total course work below 60%. They can send a warning letter to their parents. Admin will be able to view all warning letters and replies by parent.
   l. A 'Attendance' page contains Entry and Exit Lecture-wise Attendance. See the attendance list of all Students grade-wise against 2 dates.
   m. A 'Reports' page contains can view reports of all the student's attendance lists, grade-wise. They can view students' attendance reports for 2,4,6-months with lecture, entry and exit details. They can also view the academic reports of all the students.
   n. A 'Entry/Exit' page can add entry and exit of the student biometric.

2. A 'PARENTS' page contains following features

a. A 'Login' page can log in to the system using login credentials.
b. A 'Profile' page can add or update details to their profile.
c. A 'Change Password' can also change their old password to the new one.
d. A 'Forget Password' used if they forget their login password, they can receive a link to change the password on their registered email-id.
e. A 'Appointments' page contains the parent can apply to meet the admin/teacher and waits for their response. The parent will also receive the admin's request to meet them and they can respond to the request.
f. A 'Leaves' page contains Parents can view all the leaves including pending leaves. They can view the list of all their applied leaves. Parents can view leaves that have not been replied to by an admin.They can also cancel their applied leaves.
g. A 'Medical Certificate' page contains Add: Parents can upload the medical reports of their child while applying for leave. They can view all the previously uploaded lists and replies from the admin.
h. A 'Complaint' page contains Parents can add a new complaint. They can view a list of all the complaints and replies from the admin.
i. A 'Warnings' page list of the warning letters sent by admin and parents can respond to them.
j. A 'Attendance' page can view their child's attendance, lecture-wise. Also, they can view the attendance list of the child against 2 dates.
k. A 'Reports' page contains following features: Academic attendance reports can be viewed by the admin. Parents can view attendance reports of 2/4/6 Months with lecture, entry and exit details. They can also view their child's academic report.
l. A 'Notifications' page will receive notifications such as when appointment status changes or admin applied, leaves approved/rejected, medical certificate reply, complaint reply, warning letter, student entry/exit, academic marks uploaded by teacher.

3. A 'TEACHER' page contains following features

a. A 'Login' page can log in to the system using a username and password.
b. A 'Profile' page can add or update details to their profile.
c. A 'Change Password' can also change their passwords.
d. A 'Forget Password' if they forget their login password, they can receive a link to change the password on their registered email-id.
e. A 'My Subjects' page contains following features
   Assigned Subjects: A list of all assigned subjects can be viewed grade-wise.
   Students List: The teacher can view the list of the students in that Grade.
m. A 'Attendance' page contains they can select grade and subject to view attendance. Biometric Attendance: They can take the biometric attendance of students. See the Attendance list of all Students grade-wise against 2 dates, lecture-wise.
n. A 'Academics' page contains teachers can choose the grade, subject and student for their academic reports. They can view, add and update students' academic details. Teachers can add marks on tests, assignments and final exams. They can update existing marks on tests, assignments and final exams.
o. A 'Complaint' page contains teachers can add new student complaint. They can view list of all the complaints and replies from admin.

See also for authentic understanding, click the link
https://www.iitms.co.in/products/student-information-system-sis; https://samvidha.iare.ac.in; https://themeforest.net/item/clever-course-learning-management-system-theme/8645312; https://markerspro.in and so on. Each student has to refer any one of the web sites stated above.

9. PHARM EASY APPLICATION

Build a pharm easy application for ordering medicines and tests. This application comprises of following functionalities

1. A "Home Page" which consists of a list medicines & health care product.
2. A "Lab Tests page" contains different medical tests.
3. A "Health Care Products page" contains vitamins and necessary to our body.
4. A "Offers Page" offers on different products and coupons.
5. A "Account Page" contains details of individual customer.
6. A "Products Page" contains a list of products.
7. A "Detailed View of Product" detailed view of selected product.
8. A "Cart page" list of items we selected to buy.

9. A “Delivery Details Page” consists of customer address and contact details.
10. A “Payment Page” how to make payments (cod or online payments).
11. A “Success page” show transaction success.
12. A “Bottom APP Bar” consists of logos which opens the corresponding pages(fragments).
    a. Home page
    b. Test Page
    c. Health Care Page
    d. Offers Page
    e. Account Page

See also for authentic understanding, click the link **https://pharmeasy.in; https://www.netmeds.com; https://www.medlife.com; https://www.practo.com and so on. Each student has to refer any one of the web sites stated above.**

10. NEWS APPLICATION

Build a news application is to connect news articles from all around the world and deliver it to user as fast as possible in best visualize way. This application comprises of following functionalities:

1. A ‘User Interface’ page should be able to select from different categories, countries and newspaper. Short News as list view with header, little description and image before showing full article can be helpful to user to determine what type of news they are looking for. View Holder can be used for this list view for better and fast experience.
2. A ‘Admin Panel’ page controls the User and Writers logins from database. Writers can add news, update and delete from its database as per required. Main Admin can add Users, Writers, and News. He can also approve, update and delete it. Using this approach, we can create network in local areas connect by writers and local admins which will provide news at local level and we can also implement location feature which will update local news of different location or city.
3. A ‘Global Support’ page contains different type of newspaper will be available from all around the world in different languages with this user will be able to get news from all around the world.
4. A ‘Short News’ page News will be displayed in short format with title, image and little description in list view. It will help user to access required news faster.
5. A ‘Search Option’ page which user will be able to search from not only one source but many different sources available within API.
6. A ‘Favorites / Offline Reading’ page which News can be added as favorites which will automatically will be saved for offline reading.
7. A ‘Sharing’ page which user will be able to share news easily on social media.

See also for authentic understanding, click the link **https://indianexpress.com; https://www.bbc.com/news; https://www.ndtv.com; https://www.hindustantimes.com and so on. Each student has to refer any one of the web sites stated above.**

11. AIR TRANSIT TRIP PLANNER APP

Build the air transit trip planner which This passenger on transit will spend their time at the airport while waiting for the next flight without any planning to visit tourism places nearby due to short period of time and much information needed to plan a short trip. This is such a waste because they actually can boost countries’ economy in the tourism sector if they spend their time to visit some tourism places nearby the airport. Because of that, Air Transit Trip Planner aims to help these passengers on transit by planning a short trip to the nearby tourism places within the transition hour they have.

Air Transit Trip Planner also using Google Map API as a map to guide user and Google Places API as a data center to grab all the tourism places and its details. The output of this calculation is a suggestion of short trip planner for the user (passenger on transit). The trip planner will list down the tourism places user can visit within their flight transition hour, the distance to go there and also time taken to go there. Indirectly, this Air Transit Trip Planner application also helps to boost economy in the tourism sector of a country.

This application comprises of following functionalities:

1. A ‘Main Page’ which the user will see when they launch the application. In the background when this interface prompts, the system actually will automatically detect user current location by using GPS or Google Places. If no internet access or GPS is turn off, the system will prompt a pop up asking the user to turn on GPS or connect to internet. But if everything is fine, user just need to key in their transit hour and departure time then click enter.

2. A 'Tourism places' page will calculate how many tourisms places the user can visit within the transit hour they have by using the algorithm.
3. A 'place details" page will direct to new user interface with scrollable list view.
4. A 'pop up' page when user click each mark on map. When the user clicks the mark, the pop up will show the address of each location.
5. A 'GPS Navigation' page is using satellite and it is implementing context awareness concept where it will direct user to their destination. This interface also has voice navigation which will help the user to hear the navigation while driving rather than looking at the map continuously.

See also for authentic understanding, click the link **https://travelplanner.co.in; https://www.expedia.com; https://www.orbitz.com; https://www.kayak.com and so on. Each student has to refer any one of the web sites stated above.**

12. STUDENT-FACULTY DOCUMENT SHARING SYSTEM

Develop Student-Faculty Document Sharing System. This application is an online portal between students and faculty. This innovative system allows college faculty to share important data as well as notifications with engineering students. It consists of a faculty login along with student login. Since college faculty operate through pc and document uploading is simpler through a pc, the faculty login is to be performed through a computer. Faculty may upload documents of subject syllabus, timetable document, notifications, notes etc through their provided login. The documents are uploaded by faculty to different corresponding departments. We propose to build this system on an online server that allows faculty to upload data and students may view search and download required documents through their android device. Here students only see and download data of their particular semester. Faculty may access and upload/edit documents to any semester or add any notice as desired.
This application comprises of following functionalities:

1. A 'User login' page allows only the registered users to login in order to use this location tracking application.

2. A 'Document details' page stores documents in word and pdf format and also allows students to view particular data.
3. A 'Server management' page which displays the server smartly handles data and allows students with an android device to access data as well as faculty to upload document details.
4. A 'Faculty Upload' page allows faculty to upload documents to server.
5. A 'Student Download' page allows student to download only allowed semester data through his android phone using an active internet connection

See also for authentic understanding, click the link **https://akanksha.iare.ac.in; https://moodle.org; https://classroom.google.com; https://nevonprojects.com/student-faculty-document-sharing-android-project and so on. Each student has to refer any one of the web sites stated above.**

13. ONLINE RECRUITMENT SYSTEM

Build online recruitment system with the following functionalities:

1. A 'Administrator' page stores the information of the user's login and the password data. This provides security to the system and keeps the record of which user entered in the system at what instance of time. **It has the following attributes:**
   a. Username: It stores the name of the admin which acts as the unique name given to the manager of the firm.
   b. Password: This attribute holds the secured keyword given to every manager of the educational institutions who need access to the system
   c. Login-Time: The login time of the admin will be recorded in this field which helps in tracking the admin performance.
   d. Logout-Time: It stores the logout time of the admin from the system
2. A 'Job Seeker' page stores the information of the candidate who registers to the system for participation in the recruitment process, the Job Seeker entity is created. It will have all the required data about the applicant. I**t has following attributes**
   a. Can-Id: Candidate Id is a unique number given to each candidate who registers in the system
   b. Can-Name: Candidate Name is the information required for details of the applicant who registers in the system.
   c. Resume/CV: In this attribute job, seekers can store their resumes which can be reviewed by the organization if they want to further check the candidate

d. Projects: Every candidate has many projects which they have created or worked on, which they want to share with them, recruiters.
e. Personal-Info: This attribute holds all the information the recruiters needed from the candidate apart from its technical skills and eligibility.
f. Contact: This stores the contact information of the candidate like phone number and email id

3. A 'Skill' page is an essential part of the system as it works on both from recruiter and job seeker.
It has the following attributes
   a. Skill-Id: As every set of skills is unique so every set is given a unique number that acts as its id in the system.
   b. Technical: It will store the technical skill by the applicant.
   c. Academic-details: It will store the detailed information of the student in an academic field like high school marks, senior secondary marks. It will also have the graduation percentage is necessary for the skill.
   d. Cocurricular-activities: Every skill does not only require the technical talent of the student it also needs other social skills.
4. A 'Requisition' page every employer will make the requisition of the application for the given post. From the application received from the number of the job seekers, the company will check their eligibility and decide whether he/she is compatible for the post or not. Then the shortlisted student will go for further rounds of the recruitment process as per the employer. **It has following attributes**
   a. Req-Id: Every requisition present in the system given by each employer has unique numbers assigned to it.
   b. Emp-Id: This attribute will hold the information of the employer who is giving this requisition.
   c. Post: Every requisition given by the employer belongs to a specific post
   d. Skill-Id: It is a reference to a skilled entity that implies the required skill set for the specific post.
   e. Package: This attribute stores the information regarding the pay scale or salary
   f. Criteria: In the criteria attribute, data regarding the process of recruitment is stored.
5. A 'Employer' page will store the detailed information of the employer present or registered in the system. Thus, making it one of the essential entities in the system. Before applying for any post, the applicant also wants to know about the company or the employer who has given the requisition. **It has the following attributes**
   a. Emp-Id: It is the unique number given to the employer to differentiate from others.
   b. Emp-Name: It will hold the name of the employer which is registered in the system.
   c. Information: This entity will hold the information of the employer like when it is founded, what kind of projects they are working on
   d. Key-Persons: It holds the data of the important persons of the company and the point of the contact for the interested candidates.
6. A 'Interview' page has information about the interviews that will happen for the specific requisition. As the interview is an important part of any recruitment process as in this the employer and candidates come face to face and they can judge each other. **It has following attributes**
   a. Int-id: It is the unique number given to each interview process that happens in the system
   b. Int-type-id: As there are many kinds of interviews that can happen during the recruitment process.
   c. Req-Id: It will hold the reference of the requisition for which a specific employer is conducting this interview.
   d. Remarks: This has the remarks of the interviews which is given by the employers.
   e. Emp-Id: It holds the data of the employer who is conducting this interview and managing the whole process.
7. A 'Interview-Type' as there is various type of interview process which happens in the recruitment like technical for checking the technical knowledge of the candidate or the HR interview to test the social and interpersonal skill of the applicant. **It has following attributes**
   a. Int-type-id: It is the unique number given to each type of interview
   b. Int-type-Name: It holds the name of the type of interview.
8. A 'Offer-Letter' when candidates apply for the job and it takes every criterion provided for a specific post. If it qualifies for the post the company will provide him/her with the offer letter. It is a document that makes the offer to the candidate for joining the employer's firm. It has detailed information regarding the package and the work environment of the company.

It has following attributes
   a. Of-id: Each offer letter is given a unique and distinct number
   b. Emp-Id: It is the number given to the employer as it gives the information about which company has given this letter.

9. A 'Experience' to show the talent each applicant writes the experience they have gain in the previous years. It helps the employer to see which applicant has the relevant knowledge required for the post. So, they can hire a person who has more potential than others. **It has following attributes**
   a. Exp-Details: It holds the information candidate has learned during the work.
   b. Exp-Organization: The name of the organization in which the applicant has gained the experience.
10. A 'Feedback' page is holds the feedback of the job seekers about their recruitment process for an employer or a requisition. It has the following attributes:
   a. Feed-Id: It is a unique number given to each feedback. It makes the remark distinct and identifiable for the employers to take note of.
   b. Emp-id: It is a reference to the employer for which this feedback is given
   c. Feed-details: It holds the remark given by the applicant

See also for authentic understanding, click the link **https://www.tracker-rms.com; https://www.bullhorn.com/glossary/online-recruitment-system; https://www.manatal.com; https://www.whatishumanresource.com and so on. Each student has to refer any one of the web sites stated above.**

14. STUDENT COUNSELING MANAGEMENT SYSTEM

Build Student Counseling Management System with the following functionalities

1. A 'Student' page will store the record of the student registered for the counseling. It is essential for the system as a separate unit which has all the information regarding the student and their personal and professional data. So, it will have the 10th and 12th percentage, rank in the entrance exam will also be asked from student to give the preferences according to it. It has the following attributes:
   a. Name: This will store the name of the student as it needed while saving the required
   b. DOB: The date of birth of the student as mention in the high school certificate and will act as the candidate key in the database model
   c. Student-id: It is a unique alphanumeric number assigned to every student who registers for the counseling
   d. Password: It is an alphanumeric field that has the constraint of having a minimum of 8 digits and at least one alphabet with numbers
   e. 10th Percentage: This is used to get the student's percentage in high school which some universities check before giving admission to the student.
   f. 12th Percentage: It is an academic field that requires the student to give information about the 12th standard.
   g. Rank-Entrance-Exam: This attribute gets the entrance exam rank from the student which they have got according to their performance in the exam
2. A 'Choices' page is needed to get the preferences from the student based on their rank in the entrance exam. The number of choices given to the student can be multiple based on the institution that requires the seats available for the courses. These preferences will go to the courses entity which then checks which selection is eligible for the student, this evaluation will be based on the number of seats available and the rank of the student. This is also will be referenced in the allotment of the seats where the allotted seats are recorded. It has the following attribute:
   a. Rank-Entrance-Exam: This attribute gets the entrance exam rank from the student which they have got according to their performance in the exam.
   b. 1st Preference: This will be a simple attribute that holds the first preference of the student which he/she will select from the pool of choices.
   c. 2nd Preference: It will hold the second preference of the student as it is not always possible to get the first selected choice as it may have got filled or the student with a higher rank got that seat.
3. A 'Courses' page will have all the courses provided by the institutes. All the courses will have institute code will differentiate if the same courses are provided by the different institution. Every course has the define the seats available and the allotted seats along with the total seats available which will provide transparency in the system. It has the following attribute:
   a. Course-code: A unique number given to every course not depends on which university to it belongs, it helps in maintaining the record unique and distinct so act as the primary key for the entity.
   b. Institute-code: Every institute that has register itself for the system of counseling has given a unique code that differentiates it from other institutes which have the same courses.
   c. Total-seats : It will have the total seats available for that course provided by the Institute.
   d. No-of-seats: It is a composite attribute which has the further information about a number of seats allotted and the vacant seat left for the course.

4. A ‘Course-Name’ page will contain the name of the course and the unique id of that course. As the many institutes provide the same course it would be a difficult job to assign a different code to the same course. So, this field will be normalized. It has the following attribute:
   a. Course-code: A unique number is given to every unique course.
   b. Course-name: The name of the course will be stored in this attribute.
5. A ‘Allotment of Seat’ page will store the information of the student after the seat is confirmed for allotment. It has the following attribute:
   a. Student-id: Student unique id number.
   b. Rank-Entrance-exam: Rank gave to the student as per his/her performance in the entrance exam
   c. Preference-no.: The preference which got allotted, as per the choices are given to him.
   d. Course-code: The course code which got selected for.
   e. Institute-code: The institute allotted the seat.
6. A ‘Institutes’ page will store the information regarding the institutes which are participating in the counseling. Each one of them has to publish their courses for which they want students with the number of the total seats. It has the following attributes:
   a. Institute-code: Every institute that has register itself for the system of counseling has given a unique code that differentiates it from other institutes which have the same courses.
   b. Institute-name: It will hold the name of the institute as mention by them in the registration process.
   c. City: It depicts the city to which the institute belongs to as it helps as a candidate key.
   d. Password : It is an alphanumeric field that has the constraint of having a minimum of 8 digits and at least one alphabet with numbers.
7. A ‘Admitted-Student’ page maintains their own record of which student has admitted to their institute and the courses what courses they have opted for. It has the following attributes:
   a. Student-id: Student unique id number.
   b. Course-code : The course code which got selected for.
   c. Institute-code: The Institute for which the seat is allotted. Institute is related to this entity as every university will have a database of how many students have been admitted to its courses.

See also for authentic understanding, click the link **https://www.academiaerp.com; https://collegedunia.com/exams/cuet/counselling; https://nchmcounselling.nic.in; https://www.cdac.in/index.aspx?id=edu_acts_Login_cv11 and so on. Each student has to refer any one of the web sites stated above.**

15. DATA MART MANAGEMENT SYSTEM

Build a Data Mart Management system with the following functionalities

1. A ‘Master Maintenance’ page maintains the following master details for various purposes. It has the following attributes
   a. Suppliers Details
   b. Sub location In-charges Details
   c. Retailers Details
   d. Products Details
2. A ‘Shipment’ page provides you a number of functions to maintain the flow of goods in warehouse. It has the following attributes
   a. Transfer inventory
   b. Put inventory on hold
   c. View inventory balances
   d. View inventory transactions
3. A ‘Billing’ page warehouse billing process allows the retailer to generate new bills and also allows viewing of existing bills.
4. A ‘Reports’ page reports process allows the user to produce the reports necessary for day to day warehouse operations. The standard reports are
   a. Inventory Reports
   b. Purchase Order Reports
   c. Administrative Reports

See also for authentic understanding, click the link **http://www.datamartsys.com; https://netresultsgroup.com; https://www.indiamart.com; https://uniondatamart.com and so on. Each student has to refer any one of the web sites stated above.**

16. RESTAURANT RESERVATION AND TABLE MANAGEMENT SYSTEM

Build a Restaurant Reservation and Table Management system is a Web application designed to help you (and your coworkers) to select the restaurant you are going to eat in. You can manage users, restaurants, menus, prices, give notations to each lunch, etc.

1. A 'Reservation Management' page functionalities are
    a. Easily enter or modify reservations while viewing guest histories.
    b. Capture phone numbers, email and mailing addresses.
    c. Allow management blocking and VIP pre-assignments.
    d. Reduce no-shows with enhanced customer tracking.
    e. Take reservations from your website or Open Table 24 hours.
2. A 'Table Management' page functionalities are
    a. Maximize seat utilization with walk-in and waitlist functionality.
    b. Instantly track covers for more efficient kitchen and server management. Increase table turns by tracking party status. Store multiple reservation sheets for holidays and special events.
    c. Hold and combine tables for large parties.
    d. Record and view shift notes for each day
3. A 'Guest Management' page functionalities are
    a. Identify regulars and VIPs
    b. Track customer preferences to meet and anticipate special requests
    c. View customer reservation histories at-a-glance
    d. Track special occasions such as guest birthdays and anniversaries Marketing Management
    e. Conduct powerful email marketing campaigns to increase repeat business.
    f. Print mailing labels to reach select target audiences.
    g. Track and reward concierge business.
4. A 'Increase control' page functionalities are
    a. Manage reservations from the back-office or any other location. Simultaneously control multiple restaurants from key centralized locations.
    b. Share guest data across sister restaurants.

See also for authentic understanding, click the https://www.elluminatiinc.com/restaurant-reservation-system; https://restaurant.opentable.com; https://www.tornosubitodubai.com; https://indiarestaurant.co.in **and so on. Each student has to refer any one of the web sites stated above.**

17. SECURE STOCK EXCHANGE SYSTEM

Build a secure stock exchange system that is designed for the sale and purchase of securities of corporations and municipalities. A stock exchange sells and buys stocks, shares, and other such securities. In addition, the stock exchange sometimes buys and sells certificates representing commodities of trade.

The system "Secure Stock Exchange System using Web Services" consists of 3 modules

1. A 'Stock Markets and Investments' page functionalities are
    a. Stock Exchange Listing
    b. Stock Options & Analysis
    c. Stock Market Crash
    d. Selling Stock Certificates
    e. Stock Market Forecasts
2. A 'Stock Options' page contains different types of Stocks
    a. Stock Option Valuation
    b. Restricted Stock Options
3. A 'Related Information' page functionalities are
    a. Day Trading Stocks
    b. Stock Quotes & Stock Ticker
    c. Stock Charts
    d. Share Portfolio Management

See also for authentic understanding, click the https://stocksandsecurities.adityabirlacapital.com; https://www.nseindia.com; https://www.jpx.co.jp/english; https://www.mstock.com **and so on. Each student has to refer any one of the web sites stated above.**

18. COUNTRY CARGO AND EXPRESS COURIERS SYSTEM

Build a project country cargo and express couriers system to deal with the queries of manger. How much more time it will take to reach the place, and whether received in original state. Queries among the officers regarding handling etc. User satisfaction guest book where user should put some notes about service and other suggestions. User complaint registers to help us get better feedback for our failures as a hospitable interface. Providing an interactive interface for the user query for online status of the packets booked and delivered.

Modules:

1. A 'LOGIN MASTER' page is the specific module, which only has to deal with the updating of the database. Two types of user can login administrator and the employee. It checks for a valid candidate when the user enters his user id password and link to the correct page and link to the registration page. It is divided into following functions.
   a. USER ID CHECKER: As user id rules the system for updating (control panel). So his uniqueness and type of his user id know a person whether he is master or one of the employee. As it is to provide the viable candidate system, so the user id is being validated with password in different cases to validate the genuinely of the candidate.
   b. THE LOGIN STATUS MASTER: This module keeps the status of who and when logged in and for which purpose and for how much time.

2. A 'REGISTRATION MASTER' page as this module is only accessible through administrator password. This modules deal with the different state of registration as-
   a. Registration form display
   b. Client's does validation being handles by validation master
   c. Unique user id checker (checks that the user id being entered by the candidate is unique or no)
   d. Auto user id generator (user id field by taking the email id of the user if it is unique or suggest by combining it will some number).

3. A 'COURIER STATUS NOTIFICATION MASTER' module handles the query of customer and displays the result according to that customer is asked to enter the booked id in the specified input area. On the basis of input the detail regarding where material exactly is shown.
   This module contains the following sub modules-
   a. QUERY HANDLER: This module handles to and from the courier and cargo differentiation master searches the data in the database, which through different conversion through numbers of tables shows the result regarding where exactly the cargo is?
   The booking id is first searched into the courier booked table. Each booking id has a unique number associated with the different offices and also with the courier.
   On the basis of that booking id, matched with the lot id, and then with the medium and after that medium halted at which station. These statuses are shown.

4. A 'DELIVERY STATUS NOTIFICATION' page module deals with the delivery status whether the following courier has been delivered to the destination or not, how much time it will take to reach the destination. It has following sub modules-
   a. DISTANCE CALCULATOR: It takes the data from the route table that specifies distance between the current city (the city through which tile courier is passing and the destination).
   b. TIME CALCULATOR: An average time is calculated on the basis of the average time taken to reach the two adjoining city subsequently to the destination.
   c. DELEVERED STATUS: It checks the current status if the current status of the courier gives the destination address and after taking the received detail. It display whether the courier is on its way or delivered successfully.

5. A 'BOOKING DETAILS FOR CARGO' page for cargo booked, source office, destination office, container, truck detail, date dispatched etc regarding booking of new courier with a unique id.
   It includes the following sub modules-
   a. CARGO STATUS : This specially deals with the updating at intermediate office about the truck number that passed through office.
   b. LOADING UNLOADING DETAILE :This deals with the loading and unloading cargo from one truck to another truck or one container to another container and other entries to keep the site working.

6. A 'CUSTOMER QUERY HANDLER MASTER' module specially deals with the handling of query of the customer. This module has following sub modules –
   a. CUSTOMER QUERY HANDLING : This module generates a input form through which customer

can directly interact with tile intermediate office where there courier & cargo is! Through different function and tables.

b. CUSTOMER COMPLAINT REGISTER : Customer can directly enter the complaint regarding end office, and the response is sending through the head office. This complaint is only viewable through administrator account.

7. A 'CARGO STATUS NOTIFICATION MARKER' page modules handles the query of customer and display the result according to that customer is asked to enter the booked id in the specified input area. On the basis of input the detail regarding where there material exactly is shown.
   This modules contains the following sub modules-
   a. QUERY HANDLER : This modules handles the query of the customer searches the data in the database, through number of tables shows the result regarding where exactly the cargo is? The booking id is first searched in to the cargo booked table. Each booking id has unique number associated with the different offices and also with the cargo. On the basis that booking id, matched with the container, and then with the truck, and after that true halted at which station. The status is shown.

8. A 'DELIVERY STATUS NOTIFICATION SYSTEM FOR CARGO' system deals with the delivery status whether the following cargo has been delivered to the destination or not or how much time it will take to reach the destination. It has following sub modules-
   a. DISTANCE CALCULATOR: It takes the data from the route table that specifies distance between the places then calculates the distance between the current cargo (the city through which the cargo is passing and the destination).
   b. TIME CALCULATOR: An average time is calculated on the basis of the average time taken to reach the two adjoining city subsequently to the destination average truck halt time and a time in day returned.
   c. DELEVERED STATUS: It checks the current status if the current status of the cargo gives the destination address and after taking the received detail. it display whether the cargo is delivered successfully or not.

See also for authentic understanding, click the https://worldwideexpresscouriers.com; https://www.vxpress.in; https://www.tciexpress.in; https://www.bluedart.com **and so on.**
Each student has to refer any one of the web sites stated above.

V. TEXT BOOKS:

1. Reto Meier, *Professional Android 4 Application Development*, Wile Publication, 1st Edition, 2012.

VI. REFERENCE BOOKS:

1. Bill Phillips and Chris Stewart, Kristin Marsicano *Android Programming*, The Big Nerd Ranch Guide, O'Reilly, 3rd Edition, 2017.
2. Dawn Griffiths, David Griffiths, *Head First Android Development: A Learner's Guide to Building Android Apps with Kotlin, Third Edition*, O'Reilly, 3rd Edition, 2021.
3. Antonio Leiva, *Kotlin for Android Developers: Learn Kotlin while developing an Android App*, CreateSpace Independent Publishing, 1st Edition, 2016.

VII. WEB REFERENCES:

1. https://www.javatpoint.com/android-tutorial
2. https://www.tutorialspoint.com/android/index.htm
3. https://docs.flutter.dev/
4. https://developer.android.com/courses/android-basics-compose/course
5. https://developer.android.com/guide

VIII. MATERIALS ONLINE

1. Course Template
2. Lab Manual

COURSE CONTENT

ENVIRONMENTAL SCIENCE									
I Semester: AE / ME / CE / ECE / EEE/ CSE (AI & ML) / CSE / CSE (CS) / CSE (DS) / IT									
Course Code	**Category**	**Hours / Week**			**Credits**	**Maximum Marks**			
AHSD06	**Foundation**	**L**	**T**	**P**	**C**	**CIA**	**SEE**	**Total**	
		-	-	-	-	-	-	-	
Contact Classes: Nil	**Tutorial Classes: Nil**	**Practical Classes: Nil**				**Total Classes: Nil**			
Prerequisite: Basic Principles of earth science.									

I. COURSE OVERVIEW:

This course is an interdisciplinary study which examines the interaction between humans and the environment, with specific reference to the effects of modern technological advances. The students will be able to understand the sustainable development, ecological sustainability, environmental pollution, environmental issues in order to protect the environment and followed by the application of this knowledge to current environmental problems in the later years.

II. COURSES OBJECTIVES:

The students will try to learn

I. The interrelationship between living organism and environment.
II. The importance of environment by assessing its impact on the human world
III. The knowledge on themes of biodiversity, natural resources, pollution control and waste management.
IV. The sustainability and unsustainability of various interactions between human society and the earth's natural systems

III. COURSE OUTCOMES:

At the end of the course students should be able to:

CO1 Infer the basic ecological principles, biogeochemical cycles and its function for the flow of energy in ecosystem.
CO2 Awareness on different natural resources and its conservation for sustainable development.
CO3 Use alternate energy resources for future growing energy needs.
CO4 Predict the of importance of biodiversity for its productive use.
CO5 Identify the global environmental problems by different types of environmental Pollution and international summits for minimizing the problems.
CO6 Outline the features of laws and rules related to environment protection, environmental impact assessment towards sustainable development.

IV. SYLLABUS:

MODULE–I: ECOSYSTEMS

Environment: definition, scope and importance of ecosystem, classification, structure and function of an ecosystem, food chains, food webs and ecological pyramids, flow of energy; biogeochemical cycles, hydrological cycle, phosphorous cycle, nitrogen cycle, biomagnifications**.**

MODULE-II: NATURAL RESOURCES

Natural resources: classification of resources, living and nonliving resources; water resources: use and over utilization of surface and ground water, floods and droughts, dams, benefits and problems; mineral resources: use and exploitation, environmental effects of extracting and using mineral resources; land resources; energy resources: renewable and non-renewable energy sources, use of alternate energy source.

MODULE-III: BIODIVERSITY AND BIOTIC RESOURCES

Biodiversity and biotic resources: introduction, definition, genetic, species and ecosystem diversity; value of biodiversity: consumptive use, productive use, social, ethical, aesthetic and optional values; Hot spots of biodiversity.
Threats to biodiversity: habitat loss, poaching of wildlife, human-wildlife conflicts; Conservation of biodiversity: In situ and ex situ conservation.

MODULE–IV: ENVIRONMENTAL POLLUTION AND CONTROL TECHNOLOGIES
Environmental pollution: definition, causes, effects and control measures of air pollution, water pollution, soil pollution, impacts of modern agriculture and noise pollution; solid waste: municipal solid waste management, composition and characteristics of e-waste and its management; Pollution control technologies: waste water treatment methods, primary, secondary and tertiary; global environmental issues and global efforts: climate change and impacts on human environment, ozone depletion, ozone depleting substances; International conventions / protocols: Kyoto protocol and Montreal protocol.

MODULE–V:ENVIRONMENTAL POLICY AND LEGISLATION
Environmental legislations: environmental protection act, air act1981, water act, forest act. municipal solid waste management and handling rules, biomedical waste management and handling rules, hazardous waste management and handling rules, population and its explosion.

V. TEXT BOOKS:
1. Erach Bharucha, *Text Book of Environmental Studies for Under Graduate Course*, Orient Black Swan, 3rd Edition, 2021.
2. Anubha Kaushik and C P Kaushik, *Perspectives in Environmental Studies*, New Age International private limited, New Delhi,7th Edition, 2021.
3. Benny Joseph, *Environmental Studies*, Tata Mc Graw Hill Publishing Co. Ltd, New Delhi, 3rd Edition, 2017.

VI. REFERENCE BOOKS:
1. Dr.M Anji Reddy, *Text Book of Environmental Science and Technology*, BS Publications, 3rd Edition, 2014.
2. Y Anjaneyulu, *Introduction to Environmental Science*, BSP Books Private Limited, 3rd Edition, 2020.

VII.ELECTRONICSRESOURCES:
1. https://www.meripustak.com/Environmental-Science-Isv-8th-Edition-121505
2. https://www.meripustak.com&gclid=CjwKCAjwtp2bBhAGEiwAOZZTuFwLEkGc6SGNUZjXpz0ffeNwgBOHWQIKge-E-9UvXxTPxQJdjaTgJBoCrQIQAvD_BwE

VIII. MATERIALS ONLINE
1. Course Template
2. Tutorial Question Bank
3. Model Question Paper – I
4. Model Question Paper - II
5. Lecture Notes
6. Early Lecture Readiness Videos
7. Power Point Presentation

COURSE CONTENT

PROFESSIONAL COMMUNICATION									
I Semester: AE / ME / CE / CSE (AI &ML) / IT / ECE / EEE **II Semester:** CSE | CSE (DS) | CSE (CS)									
Course Code	**Category**	**Hours / Week**			**Credits**	**Maximum Marks**			
		L	**T**	**P**	**C**	**CIA**	**SEE**	**Total**	
AHSD01	**Foundation**	3	-	-	3	40	60	100	
Contact Classes: 64	**Tutorial Classes: Nil**	**Practical Classes: Nil**				**Total Classes: 48**			
Prerequisite:									

I. COURSE OVERVIEW:

The principle aim of the course is that the students will have awareness about the importance of English language in the contemporary times and also it emphasizes the students to learn this languageas a skill (listening skill, speaking skill, reading skill and writing skill). Moreover, the course benefits the students how to solve their day-to-day problems in speaking English language. Besides, it assists the students to reduce the mother tongue influence and acquire the knowledge of neutral accent. The course provides theoretical and practical knowledge of English language and it enables students to participate in debates about informative, persuasive, didactic, and commercial purposes.

II. COURSE OBJECTIVES:

The students will try to learn:

I Standard pronunciation, appropriate word stress, and necessary intonation patterns foreffective communication towards achieving academic and professional targets.

II Appropriate grammatical structures and also using the nuances of punctuation tools forpractical purposes.

III Critical aspect of speaking and reading for interpreting in-depth meaning between thesentences.

IV Conceptual awareness on writing in terms of unity, content, coherence, and linguisticaccuracy.

III. COURSE OUTCOMES:

After successful completion of the course, students should be able to:

CO 1 Demonstrate the prime necessities of listening skills and communication skills for academic and non-academic purposes.

CO 2 Explain effectively in spoken English on issues and ideas with a reasonable degree of fluency and accuracy in different social settings and different kinds of social encounters.

CO 3 Strengthen acceptable language for developing life skills to overcome the challenges at professional platform.

CO 4 Interpret the grammatical and lexical forms of English and use of these forms in specific communicative contexts.

CO 5 Articulate main ideas, both stated and inferred, and important details in academic, journalistic, and literary prose at advanced level.

CO 6 Extend writing skills for fulfilling academic and work-place requirements of various written communicative functions.

IV. COURSE CONTENT:

MODULE – I: GENERAL INTRODUCTION AND LISTENING SKILLS (13)
Introduction to communication skills, communication process, elements of communication, soft skills and hard skills, importance of soft skills for engineers, listening skills, significance of listening skills, stages of listening, barriers and effectiveness of listening, listening comprehension.

MODULE – II: SPEAKING SKILL (13)
Significance of speaking skills, essentials of speaking skills, verbal and non-verbal communication, generating talks based on visual prompts, public speaking, exposure to structured talks, delivering speech effectively, oral presentation using power point slides.

MODULE – III: VOCABULARY AND GRAMMAR (13)
The concept of word formation, idioms and phrases, one-word substitutes, sentence structure (simple, compound and complex), usage of punctuation marks, advanced level prepositions.

Tenses, subject verb agreement, degrees of comparison, direct and indirect speech, questions tags.

MODULE – IV: READING SKILL (12)
Significance of reading skills, techniques of reading, skimming-reading for the gist of a text, scanning–reading for specific information, intensive, extensive reading, reading comprehension, metaphor and figurative language.

MODULE – V: WRITING SKILL (13)
Significance of writing skills, effectiveness of writing, the role of a topic sentence andsupporting sentences in a paragraph, organizing principles of paragraphs in a document, writing introduction and conclusion, techniques for writing precis, various formats for letter writing (block format, full block format, and semi bloc format), e-mail writing, report writing.

V. TEXT BOOKS:

1. Anjana Tiwari, *Communication Skills in English*, Khanna Publishing House: New Delhi,2022.

VI. REFERENCE BOOKS:

1. Norman Whitby, *Business Benchmark: Pre-Intermediate to Intermediate* – BECPreliminary, Cambridge University Press, 2nd Edition, 2008.
2. Devaki Reddy, Shreesh Chaudhary, *Technical English*, Macmillan, 1st Edition, 2009.
3. Rutherford, Andrea J, *Basic Communication Skills for Technology*, Pearson Education, 2ndEdition, 2010.
4. Raymond Murphy, *Essential English Grammar with Answers*, Cambridge UniversityPress, 2nd Edition, 2010.

VII. ELECTRONICS RESOURCES:

1. https://akanksha.iare.ac.in/index?route=course/details&course_id=954
2. https://akanksha.iare.ac.in/index?route=course/details&course_id=10
3. https://akanksha.iare.ac.in/index?route=course/details&course_id=352
4. https://akanksha.iareac.in/index?route=publicprofile&id=5075

VIII. MATERIALS ONLINE

1. Course template
2. Tech-talk topics
3. Assignments
4. Definition and terminology
5. Tutorial question bank
6. Model question paper – I
7. Model question paper – II
8. Lecture notes
9. Early lecture readiness videos (ELRV)
10. Power point presentations

COURSE CONTENT

DIFFERENTIAL EQUATIONS AND VECTOR CALCULUS								
II Semester: AE / ME / CE / ECE / EEE / CSE / CSE (AI & ML) / CSE (DS) / CSE (CS) / IT								
Course Code	**Category**	**Hours/Week**			**Credits**	**Maximum Marks**		
AHSD08	**Foundation**	**L**	**T**	**P**	**C**	**CIA**	**SEE**	**Total**
		3	1	-	4	40	60	100
Contact Classes: 48	**Tutorial Classes: 16**	**Practical Classes: Nil**				**Total Classes: 64**		
Prerequisite: Basic Principles of Matrices and Calculus								

I. COURSE OVERVIEW:

This course serves as a foundation course on differential equations and vector calculus. It includes techniques for solving ordinary differential equations, partial differential equations, vector differentiation and vector integration. It is designed to extract the mathematical developments, skills, from basic concepts to advance level of engineering problems to meet the technological challenges.

II. COURSE OBJECTIVES:

The students will try to learn:

I The analytical methods for solving first and higher order differential equations with constant coefficients.

II The analytical methods for formation and solving partial differential equations.

III The physical quantities of vector valued functions involved in engineering field.

IV The logic of vector theorems for finding line, surface and volume integrals.

III. COURSE OUTCOMES:

At the end of the course students should be able to:

CO1 Utilize the methods of differential equations for solving the orthogonal trajectories and Newton's law of cooling. cooling.

CO2 Solve the higher order linear differential equations with constant coefficients by using method of variation of parameters.

CO3 Make use of analytical methods for PDE formation to solve boundary value problems.

CO4 Identify various techniques of Lagrange's method for solving linear partial differential equations which occur in science and engineering.

CO5 Interpret the vector differential operators and their relationships for solving engineering problems.

CO6 Apply the integral transformations to surface, volume and line of different geometrical models in the domain of engineering.

IV. COURSE CONTENT:

MODULE-I: FIRSTORDERAND FIRST DEGREE ODE (10)

Exact differential equations, Equations reducible to exact differential equations, linear and Bernoulli's equations, Applications: Orthogonal Trajectories (Cartesian Coordinates) Newton's law of cooling.

MODULE-II: ORDINARY DIFFERENTIAL EQUATIONS OF HIGHER ORDER (10)

Second order linear differential equations with constant coefficients: non-homogeneous terms of the type e^{ax}, $\sin ax$, $\cos ax$, polynomials in x, $e^{ax}(x)$and method of variation of parameters.

MODULE-III: PARTIAL DIFFERNTIATIAL EQUATIONS (09)

Formation of partial differential equations by elimination of arbitrary constants and arbitrary functions.

Solutions of first order linear equations: method of grouping and method of multipliers.

MODULE–IV: VECTOR DIFFERNTIATION (09)

Scalar and vector point functions; definitions of gradient, divergent and curl with examples; solenoidal and irrotational vector point functions; scalar potential function.

MODULE–V: VECTOR INTEGRATION (10)

Line integral, surface integral and volume integral, Green‘s theorem in a plane, Stoke’s theorem and Gauss divergence theorem without proofs.

V. TEXT BOOKS:

1. B. S. Grewal, *Higher Engineering Mathematics*, 44/e, Khanna Publishers, 2017.
2. Erwin Kreyszig, *Advanced Engineering Mathematics*, 10/e, John Wiley & Sons, 2011.

VI. REFERENCE BOOKS:

1. R. K. Jain and S. R. K. Iyengar, *Advanced Engineering Mathematics*, 3/ed, Narosa Publications, 5th Edition, 2016.
2. George B. Thomas, Maurice D. Weir and Joel Hass, Thomas, *Calculus*, 13/e, Pearson Publishers, 2013.
3. N.P.Bali and Manish Goyal, *A text book of Engineering Mathematics*, Laxmi Publications, Reprint, 2008
4. Dean G. Duffy, *Advanced Engineering Mathematics with MATLAB*, CRC Press.
5. Peter O’Neil *Advanced Engineering Mathematics*, Cengage Learning.
6. B.V. Ramana, *Higher Engineering Mathematics*, McGraw Hill Education.

VII. ELECTRONIC RESOURCES:

1. Engineering Mathematics - I, By Prof. Jitendra Kumar |https://onlinecourses.nptel.ac.in/noc23_ma88/preview
2. Advanced Calculus for Engineers, By Prof. Jitendra Kumar, Prof. Somesh Kumar https://onlinecourses.nptel.ac.in/noc23_ma86/preview
3. http://www.efunda.com/math/math_home/math.cfm
4. http://www.ocw.mit.edu/resourcs/#Mathematics
5. http://www.sosmath.com
6. http://www.mathworld.wolfram.com

VIII. MATERIAL ONLINE:

1. Course template
2. Tech-talk topics
3. Assignments
4. Definition and terminology
5. Tutorial question bank
6. Model question paper – I
7. Model question paper – II
8. Lecture notes
9. Early lecture readiness videos (ELRV)
10. Power point presentations

COURSE CONTENT

ESSENTIALS OF PROBLEM SOLVING								
II Semester: CSE / CSE (AI & ML) / CSE (DS) / CSE (CS) / IT / ECE / EEE								
Course Code	**Category**	**Hours / Week**			**Credits**	**Maximum Marks**		
ACSD05	**Foundation**	**L**	**T**	**P**	**C**	**CIA**	**SEE**	**Total**
		3	0	0	3	40	60	100
Contact Classes: 48	**Tutorial Classes: Nil**	**Practical Classes: Nil**				**Total Classes: 48**		
Prerequisite: There is no prerequisite to take this course								

I. COURSE OVERVIEW:

This course aims to provide exposure to problem solving through programming. Useful graph theory concepts, numerical techniques, and their applications to real world problems are discussed. Graph theoretical notions and the use of algorithms, both in the mathematical theory of graphs and its applications are discussed. Student will also learn how to implement and interpret numerical solutions by writing a well-designed computer programs in regard to their efficiency and suitability for real-life applications.

II. COURSES OBJECTIVES:

The students will try to learn

I. The fundamental concepts of graph theory and its properties.
II. The basics related to paths and cycles using Eulerian and Hamiltonian cycles.
III. The applications of graph colouring and traversal algorithms for solving real-time problems.
IV. The numerical methods to solve algebraic equations.

III. COURSE OUTCOMES:

At the end of the course students should be able to:

CO1 Outline the graph terminologies, graph representation, and relate them to practical examples.
CO2 Build efficient graph routing algorithms for various optimization problems on graphs.
CO3 Use effective techniques from graph theory to solve problems in networking and telecommunication.
CO4 Interpret the fundamental concepts of polynomials, roots of equations and solve corresponding problems using computer programs.
CO5 Apply the knowledge of numerical methods to solve algebraic and transcendental equations arising in real-life situations.
CO6 Solve numerical integrals and ordinary differential equations to simulate discrete time algorithms.

IV. COURSE CONTENT:

MODULE - I GRAPH THEORY (08)

Graph terminology, digraphs, weighted graphs, complete graphs, graph complements, bipartite graphs, graph combinations, isomorphisms, matrix representations of graphs, incidence and adjacency matrices, degree sequence.

MODULE - II GRAPH ROUTES (10)

Eulerian circuit: Konigsberg bridge problem, touring a graph; Eulerian graphs, Hamiltonian cycles, the traveling salesman problem; Shortest paths: Dijkstra's algorithm, walks using matrices.

MODULE - III GRAPH COLORING AND GRAPH ALGORITHMS (10)

Four color theorem, vertex coloring, edge coloring, coloring variations, first-fit coloring algorithm.

Graph traversal: depth-first search, bread-first search and its applications; Minimum spanning trees: Kruskal's and Prim's algorithm, union-find structure.

MODULE - IV: ALGEBRAIC AND TRANSCENDENTAL EQUATIONS (10)

Algebraic equations, method of false position, bisection method, iteration method, Newton-Raphson method, Secant method, Ramanujan's Method, Muller's method (Approximation up to 2 decimals only).

MODULE - V: NUMERICAL INTEGRATION AND ORDINARY DIFFERENTIATIAL EQUATIONS (10)

Trapezoidal rule, Simpson's 1/3 rule, Simpson's 3/8 rule, Solution by Taylor's series, Euler's method of solving an ordinary differential equation numerically, Runge-Kutta's second order method of solving ordinary differential equations (Approximation up to 2 decimals only).

V. TEXT BOOKS:

2. Karin R Saoub, *Graph Theory: An Introduction to Proofs, Algorithms, and Applications*, 1st edition, Chapman and Hall, 2021.
3. S S Sastry, *Introductory Methods of Numerical Analysis*, 5th edition, 2012.

VI. REFERENCE BOOKS:

1. Mahinder Kumar Jain, *Numerical Methods: For Scientific and Scientific Computation*, New Age International Pvt. Ltd., 7th edition, 2019.
2. P Kandasamy, K Thilagavathy, K Gunavathi, *Numerical Methods*, S Chand and Company, 2006.
3. R Balakrishnan, K Ranganathan, *A Textbook of Graph Theory*, Springer Exclusive, 2nd edition, 2019.
4. Jann Kiusalaas, *Numerical Methods in Engineering with Python*, Cambridge University Press, 2nd edition 2010.
5. Gary Chartrand, Ping Zhang, *A First Course in Graph Theory*, Dover Publications Inc., 2012.
6. James F. Epperson, *An Introduction to Numerical Methods and Analysis*, Wiley, 2nd edition, 2013.

VII. ELECTRONICS RESOURCES:

1. https://www.geeksforgeeks.org/numerical-methods-and-calculus-gq/
2. https://www.geeksforgeeks.org/program-for-bisection-method/
3. https://ocw.mit.edu/courses/2-993j-introduction-to-numerical-analysis-for-engineering-13-002j-spring-2005/pages/lecture-notes/
4. https://www.tutorialspoint.com/graphs-and-its-traversal-algorithms
5. https://web.mit.edu/urban_or_book/www/book/chapter6/6.4.4.html
6. https://www.hackerearth.com/practice/algorithms/graphs/minimum-spanning-tree/tutorial/
7. https://www.codingninjas.com/studio/library/euler-and-hamilton-paths

VIII. MATERIALS ONLINE

1. Course template
2. Tutorial question bank
3. Tech-talk topics
4. Open-ended experiments
5. Definitions and terminology
6. Assignments
7. Model question paper – I
8. Model question paper – II
9. Lecture notes
10. PowerPoint presentation
11. E-Learning Readiness Videos (ELRV)

.

ELEMENTS OF ELECTRICAL AND ELECTRONICS ENGINEERING								
I Semester: CSE (AI&ML) / IT / AERO / MECH / CIVIL **II Semester:** CSE / CSE (DS) / CSE (CS)								
Course Code	**Category**	**Hours / Week**			**Credits**	**Maximum Marks**		
AEED01	**Foundation**	**L**	**T**	**P**	**C**	**CIA**	**SEE**	**Total**
		3	-	-	3	40	60	100
Contact Classes: 48	**Tutorial Classes: Nil**	**Practical Classes: Nil**				**Total Classes: 48**		
Prerequisite: Physics								

I. COURSE OVERVIEW:

This course enables knowledge on electrical quantities such as current, voltage, and power, energy to know the impact of technology in global and societal context. It provides the knowledge on basic DC and AC circuits used in electrical and electronic devices, highlights the importance of electrical machines and basics of semiconductor devices like diodes and transistors.

II. COURSES OBJECTIVES:

The students will try to learn

I The fundamentals of electrical circuits and analysis of circuits with DC and AC excitation using circuit laws.
II The construction and operation of Electrical machines.
III The operational characteristics of semiconductor devices with their applications.

III. COURSE OUTCOMES:

At the end of the course students should be able to:

CO 1 Make use of basic electrical laws for solving DC and AC circuits.

CO 2 Apply network theorems for analysis of simple electrical circuits.

CO 3 Demonstrate the fundamentals of electromagnetism for the operation of DC and AC machines.

CO 4 Utilize the characteristics of semiconductor devices for the application of rectifiers and regulators.

CO 5 Interpret the transistor configurations for optimization of the operating point.

CO 6 Understand the amplifier circuits using transistors for calculating different parameters

IV. COURSE CONTENT:

MODULE-I: INTRODUCTION TO ELECTRICAL CIRCUITS (09)

Circuit concept: Ohm's law, Kirchhoff's laws, the equivalent resistance of networks, star to delta transformation, mesh and nodal analysis (with DC source only).

Single phase AC circuits: representation of alternating quantities, RMS, average, form and peak factor, RLC series circuit.

MODULE-II: NETWORK THEOREMS AND THREE-PHASE VOLTAGES (10)

Network Theorems: Superposition, reciprocity, Thevenin's, Norton's, Maximum power transfer theorems for DC excitation circuits, three phase voltages (Definitions only): Voltage and current relationships in star and delta connections.

MODULE-III: ELECTRICAL MACHINES AND SEMICONDUCTOR DIODES (10)

DC and AC machines: Motors and generators, principle of operation, parts, EMF equation, types, applications, losses and efficiency.

Semiconductor diode: P-N Junction diode, symbol, V-I characteristics, half wave rectifier, full wave rectifier, bridge rectifier and filters, diode as a switch, Zener diode as a voltage regulator.

MODULE-IV: BIPOLAR JUNCTION TRANSISTOR AND APPLICATIONS (10)

Bipolar junction transistor: Characteristics and configurations, working principle NPN and PNP transistor, CE, CB, CC configurations – input and output characteristics, transistor as a switch.

MODULE-V: TRANSISTOR AMPLIFIERS (09)

Amplifier circuits: Two port devices and network, small signal models for transistors, concept of small signal operation, amplification in CE amplifier, h parameter model of a BJT- CE, CB and emitter follower analysis.

V. TEXT BOOKS:

1. M. S. Sukhija, T. K. Nagsarkar, *Basic Electrical and Electronics Engineering*, Oxford, 1st Edition, 2012.
2. Salivahanan, *Electronics Devices & Circuits*, TMH 4th Edition 2012.

VI. REFERENCE BOOKS:

1. CL Wadhwa, *Electrical Circuit Analysis including Passive Network Synthesis*, International, 2nd Edition, 2009.
2. David A Bell, *Electric circuits*, Oxford University Press,7th Edition,2009.
3. PS Bimbra, *Electrical Machines*, Khanna Publishers, 2nd Edition,2008.
4. D.P. Kothari and I. J. Nagrath, *Basic Electrical Engineering*, Tata McGraw Hill, 4th Edition, 2019.

VII. ELECTRONICS RESOURCES:

1. https://www.kuet.ac.bd/webportal/ppmv2/uploads/1364120248DC%20Machines
2. https://www.eleccompengineering.files.wordpress.com/2014/08/a-textbook-of-electrical-technologyvolume-ii-ac-and-dc-machines-b-l-thferaja.pdf
3. https://www.geosci.uchicago.edu/~moyer/GEOS24705/Readings/Klempner_Ch1.pdf
4. https://www.ibiblio.org/kuphaldt/electricCircuits/DC/DC.pdf
5. https://www.users.ece.cmu.edu/~dwg/personal/sample.pdf.
6. https://www.iare.ac.in

VIII. MATERIALS ONLINE

1. Course template
2. Tutorial question bank
3. Tech talk topics
4. Definitions and terminology
5. Open ended experiments
6. Model question paper-i
7. Model question paper-ii
8. Lecture notes
9. Early learning readiness videos (elrv)
10. Power point presentations

COURSE CONTENT

PROFESSIONAL COMMUNICATION LABORATORY								
I Semester: CSE (AI&ML) | IT | AE | ECE | EEE | ME |CE | **II Semester:** CSE | CSE(DS) | CSE(CS)								
Course Code	**Category**	**Hours / Week**			**Credits**	**Maximum Marks**		
AHSD04	**Foundation**	**L**	**T**	**P**	**C**	**CIA**	**SEE**	**Total**
		-	-	2	1	40	60	100
Contact Classes: Nil	**Tutorial Classes: Nil**	**Practical Classes: 45**				**Total Classes: 45**		
Prerequisite: Nil								

I. COURSE OVERVIEW:

This laboratory course is designed to introduce students to create a wide exposure on language learning techniques of the basic elements of listening skills, speaking skills, reading skills and writing skills. In this laboratory, students are trained in communicative English language skills, phonetics, word accent, word stress, rhythm, intonation, oral presentations and extempore speeches. Students are also taught in terms of seminars, group-discussions, presenting techniques of writing, participating in role plays, telephonic etiquettes, asking and giving directions, information transfer, debates, description of persons, places and objects etc. The laboratory encourages students to work in a group, engage in peer-reviews and inculcate team spirit through various exercises on grammar, vocabulary, and pronunciation games etc. Students will make use of all these language skills in academic, professional and real time situations.

II. COURSES OBJECTIVES

The students will try to learn:

I. English speech sounds, word accent, intonation and stress patterns for effective pronunciation.
II. Critical aspect of speaking and reading for interpreting in-depth meaning between the sentences.
III. Language techniques for social interactions such as public speaking, group discussions and interviews.
IV. Computer-assisted multi-media instructions and independent language learning.

III. COURSE OUTCOMES:

At the end of the course, students will be able to:

CO 1 Articulate acceptable accent in order to execute formal and informal communication.
CO 2 Differentiate stress shifts, syllabification and make use of past tense and plural markers effectively in connected speech; besides participate in role plays with confidence.
CO 3 Use weak forms and strong forms in spoken language and maintain intonation patterns as a native speaker to avoid mother tongue influence; moreover, practice various etiquettes at professional platform.
CO 4 Demonstrate errors in pronunciation and the decorum of oral presentations; for that reason, take part joining in group discussions and debates with much critical observations.
CO 5 Strengthen writing effective messages, notices, summaries and also able to write reviews very critically of art and academical videos.
CO 6 Argue scholarly, giving the counters to open ended experiments, and also writing slogans for the products talentedly.

Dos

1. Turn up in a neat and formal dress code regularly and maintain punctuality.
2. Bring observation books and worksheets for every laboratory session without fail.
3. Keep lab record book up to date.
4. Students must adhere to the acceptable use of ICT resources policy.
5. CD ROM ‘s, USB and other multimedia equipment are for college use only.
6. Replace headsets onto the monitor and rearrange your chairs back into their position as you leave laboratory.
7. Get your lab worksheets evaluated and upload online within the stipulated time for online evaluation by the faculty concerned.

8. Conduct yourself at the best to be a good learner.

Don'ts

1. Do not use the on/off switch to reboot the system.
2. Do not breach copyright regulations.
3. The not install or download any software or modify or delete any system files on any laboratory computer.
4. Do not read or modify other users' files.
5. Do not damage, remove, or disconnect any labels, parts, cables or equipment.
6. The not make undue noise in the laboratories. Be considerate of the other lab users- this is study area.
7. No food and the beverages are allowed into computer laboratories.

IV.COURSE CONTENT

Exercises for professional communication laboratory

Note: Students are encouraged to bring their own laptops for laboratory practice session

Getting started exercises

1.Introduction to pronunciation

Experiments

CALL LAB: Introduction to pronunciation

ICS LAB: Introducing self and introducing others and feedback

Activities

a) Pronunciation practice among groups.
b) Follow formal rules of introducing self and others and giving the constructive feedback.
c) Pronunciation practice from the K-Van software

2. Introduction to phonetics

Experiments

CALL LAB: Introduction to phonetics, listening to English sounds, Vowel and Consonant sounds.

ICS LAB: Describing a person or place or a thing using relevant adjectives – feedback

Activities

a) Introduction to phonetics, listening to English sounds, Vowel and Consonant sounds
b) Describing a person or place or a thing using relevant adjectives and giving valid feedback.
c) Listening English phonemes from K-Van software

3. Syllabification of different lexemes

Experiments

CALL LAB: Structure of syllables.

ICS LAB: JAM Sessions using public address system

Activities

a) Participating in just a minute session
b) Practicing consonant clusters
c) Practicing different methods of dividing the syllables

4. Word accent and stress shift patterns

Experiments:

CALL LAB: Word accent and stress shifts.

ICS LAB: Asking for directions and giving directions

Activities:

a) Usage of appropriate lexical tools at the time of giving directions
b) Pronounce weak and strong forms using strategies in spoken language

5. Usage of markers in pronunciation

Experiments:
CALL LAB: Past tense and plural markers.
ICS LAB: Role plays on fixed expressions in various situations

Activities:

a) Addition of suffixes to verbs
b) Multiple exercises on nouns based its number
c) Execution of body language in different contexts

6. Use of form in connected speech

CALL LAB: Weak forms and strong forms
ICS LAB: Extempore-Picture

Activities:

a) Practice on recognition of objects
b) Preparation on connected speech based on tone boundaries
c) Execution while describing pictures

7. Intonation patterns

Experiments
CALL LAB: Intonation
ICS LAB: Interpretation of Proverbs and Idioms

Activities

a) Voce modulation in speech as per context
b) Application of proverbs in real life contexts
c) Exercises on idiomatic expressions

8. Neutralization of Mother Tongue influence (MTI)

Experiments
CALL LAB: Neutralization of Mother Tongue Influence (MTI).
ICS LAB: Etiquette

Activities

a) Mirror practicing to get rid of mother tongue influence
b) Listening to English speeches from native speakers
c) Etiquettes for social and professional behavior

9. Oral presentations

Experiments
CALL LAB: Common errors in pronunciation practice through tongue twisters.
ICS LAB: Oral Presentations

Activities

a) Practicing tongue twisters to accelerate language fluency
b) Practice on how to grab attention of audience
c) Formulating strategies for structured presentation

10. Minimal pairs and debates

Experiments
CALL LAB: Minimal pairs.
ICS LAB: Debates

Activities

a) Practicing minimal pair dominoes
b) Working on minimal pair-cards and counters
a) Executing interpersonal skills with argumentative issues

11. Listening comprehension skills

Experiments
CALL LAB: Listening comprehension.
ICS LAB: Group discussion

Activities
a) Listening to dialogues of native speakers
b) Listening and writing short stories
b) Exercising group discussion on various social issues

12. Enriching writing skills

Experiments
CALL LAB: Demonstration on how to write leaflets, messages and notices.
ICS LAB: Techniques and methods to write summaries and reviews of videos

Activities
a) Practice on writing suitable messages and notices
b) Summary writing techniques
c) Practice on writing reviews for sociopolitical videos

13. Activities on pronunciation skills

Experiments
CALL LAB: Pronunciation practice.
ICS LAB: Information transfer

Activities
a) Exercise on commonly mispronounced words
b) Preparation on similar words pronunciation
c) Practice on transferring information through chats and diagrams

14. Writing reviews after watching statements

Experiments
CALL LAB: Open ended experiments-phonetics practice.
ICS LAB: Providing reviews and remarks

Activities
a) Writing three term labels for vowels
b) Writing three term labels for consonants
c) Practice on giving reviews and remarks

15. Experiments on text to speech and writing slogans

Experiments
CALL LAB: Open-ended experiments-text to speech.
ICS LAB: Writing slogan related to the image

Activities
a) Practice through streaming video lessons
b) Training on creating dialogues and stories
c) Practice on designing and writing slogans

V. TEXT BOOKS:

1. Professional Communication laboratory manual

VI. REFERENCE BOOK

1. Meenakshi Raman, Sangeetha Sharma, *Technical Communication Principles and Practices*, Oxford University Press, New Delhi, 3rd Edition, 2015.
2. Rhirdion, Daniel, *Technical Communication*, Cengage Learning, New Delhi, 1st Edition, 2009.

VII. ELECTRONICS RESOURCES

1. Cambridge online pronunciation dictionary https://dictionary.cambridge.org/
2. Fluentu website https://www.fluentu.com/
3. Repeat after us https://brycs.org/clearinghouse/3018/
4. Language lab https://brycs.org/clearinghouse/3018/
5. Oxford online videos

VIII. MATERIALS ONLINE

1. Course template
2. Lab manual

COURSE CONTENT

PROGRAMMING FOR PROBLEM SOLVING LABORATORY								
II Semester: AE / ME / CE / ECE / EEE / CSE / CSE (AI & ML) / CSE (DS) / CSE (CS) / IT								
Course Code	**Category**	**Hours / Week**			**Credits**	**Maximum Marks**		
ACSD06	**Foundation**	**L**	**T**	**P**	**C**	**CIA**	**SEE**	**Total**
		0	1	2	2	40	60	100
Contact Classes: Nil	**Tutorial Classes: 15**	**Practical Classes: 30**				**Total Classes: 45**		
Prerequisites: **There are no prerequisites to take this course.**								

I. COURSE OVERVIEW:

The course is designed with the fundamental programming skills and problem-solving strategies necessary to tackle a wide range of computational challenges. Through hands-on programming exercises and projects, students will learn how to write code, analyze problems and develop solutions using various programming languages and tools. The course will cover fundamental programming concepts and gradually progress to more advanced topics.

II. COURSE OBJECTIVES

The students will try to learn:

I. The fundamental programming constructs and use of collection data types in Python.
II. The ability to develop programs using object-oriented features.
III. Basic data structures and algorithms for efficient problem-solving.
IV. Principles of graph theory and be able to apply their knowledge to a wide range of practical problems across various disciplines.

III. COURSE OUTCOMES:

At the end of the course students should be able to:

CO1 Adapt programming concepts, syntax, and data structures through hands on coding exercises.
CO2 Develop the ability to solve a variety of programming problems and algorithms using python.
CO3 Implement complex and custom data structures to solve real-world problems.
CO4 Demonstrate proficiency in implementing graph algorithms to solve variety of problems and scenarios.
CO5 Develop critical thinking skills to solve the various real-world applications using graph theory.
CO6 Learn the importance of numerical methods and apply them to tackle a wide range of computational problems.

IV. COURSE CONTENT:

EXERCISES FOR PROGRAMMING FOR PROBLEM SOLVING LABORATORY

Note: Students are encouraged to bring their own laptops for laboratory practice sessions.

1. Getting Started Exercises

1.1 Two Sum

Given an array of integers nums and an integer target, return indices of the two numbers such that they add up to target. You may assume that each input would have exactly one solution, and you may not use the same element twice. You can return the answer in any order.

Input: nums = [2, 7, 11, 15], target = 9

Output: [0, 1]

Explanation: Because nums[0] + nums[1] == 9, so return [0, 1].

Input: nums = [3, 2, 4], target = 6

Output: [1, 2]

Input: nums = [3, 3], target = 6

Output: [0, 1]

Hints:

```
def twoSum(self, nums: List[int], target: int) -> List[int]:
    a=[]
    # Write code here
    …

    return a
```

1.2 Contains Duplicate

Given an integer array nums, return true if any value appears at least twice in the array, and return false if every element is distinct.

Input: nums = [1, 2, 3, 1]

Output: true

Input: nums = [1, 2, 3, 4]

Output: false

Input: nums = [1, 1, 1, 3, 3, 4, 3, 2, 4, 2]

Output: true

Hints:

```
def containsDuplicate(self, nums):
    a = set() # set can have only distinct elements
    # Write code here
    …
    return False
```

1.3 Roman to Integer

Roman numerals are represented by seven different symbols: I, V, X, L, C, D and M.

Symbol	Value
I	1
V	5
X	10
L	50
C	100
D	500
M	1000

For example, 2 is written as II in Roman numeral, just two ones added together. 12 is written as XII, which is simply X + II. The number 27 is written as XXVII, which is XX + V + II.

Roman numerals are usually written largest to smallest from left to right. However, the numeral for four is not IIII. Instead, the number four is written as IV. Because the one is before the five we subtract it making four. The same principle applies to the number nine, which is written as IX. There are six instances where subtraction is used:
I can be placed before V (5) and X (10) to make 4 and 9.
X can be placed before L (50) and C (100) to make 40 and 90.
C can be placed before D (500) and M (1000) to make 400 and 900.

Given a roman numeral, convert it to an integer.

Input: s = "III"

Output: 3

Input: s = "LVIII"

Output: 58

Hints:

```
def romanToInt(self, s: str) -> int:
        # Write code here
       …

        return number
```

1.4 Plus One

You are given a large integer represented as an integer array digits, where each digits[i] is the ith digit of the integer. The digits are ordered from most significant to least significant in left-to-right order. The large integer does not contain any leading 0's. Increment the large integer by one and return the resulting array of digits.

Input: digits = [1, 2, 3]

Output: [1, 2, 4]

Explanation: The array represents the integer 123.

Incrementing by one gives 123 + 1 = 124.

Thus, the result should be [1, 2, 4].

Hints:

```
def plusOne(self, digits: List[int]) -> List[int]:
       n = len(digits)
       # Write code here
        …

       return digits
```

1.5 Majority Element

Given an array nums of size n, return the majority element. The majority element is the element that appears more than ⌊n / 2⌋ times. You may assume that the majority element always exists in the array.

Input: nums = [3, 2, 3]

Output: 3

Input: nums = [2, 2, 1, 1, 1, 2, 2]

Output: 2

Hints:

```
def majorityElement(self, nums):
       # write code here
              …
```

1.6 Richest Customer Wealth

You are given an m x n integer grid accounts where accounts[i][j] is the amount of money the ith customer has in the jth bank. Return the wealth that the richest customer has. A customer's wealth is the amount of money they have in all their bank accounts. The richest customer is the customer that has the maximum wealth.

Input: accounts = [[1, 2, 3], [3,2,1]]

Output: 6

Explanation:

1st customer has wealth = 1 + 2 + 3 = 6

2nd customer has wealth = 3 + 2 + 1 = 6

Both customers are considered the richest with a wealth of 6 each, so return 6.

Input: accounts = [[1, 5], [7,3],[3,5]]

Output: 10

Explanation:

1st customer has wealth = 6

2nd customer has wealth = 10

3rd customer has wealth = 8

The 2nd customer is the richest with a wealth of 10.

Input: accounts = [[2,8,7],[7,1,3],[1,9,5]]

Output: 17

Hints:

```
def maximumWealth(self, accounts: List[List[int]]) -> int:
    # write code here
        …
```

1.7 Fizz Buzz

Given an integer n, return a string array answer (1-indexed) where:

answer[i] == "FizzBuzz" if i is divisible by 3 and 5.

answer[i] == "Fizz" if i is divisible by 3.

answer[i] == "Buzz" if i is divisible by 5.

answer[i] == i (as a string) if none of the above conditions are true.

Input: n = 3

Output: ["1","2","Fizz"]

Input: n = 5

Output: ["1","2","Fizz","4","Buzz"]

Input: n = 15

Output: ["1","2","Fizz","4","Buzz","Fizz","7","8","Fizz","Buzz","11","Fizz","13","14","FizzBuzz"]

Hints:

```
def fizzBuzz(self, n: int) -> List[str]:
    # write code here
        …
```

1.8 Number of Steps to Reduce a Number to Zero

Given an integer num, return the number of steps to reduce it to zero. In one step, if the current number is even, you have to divide it by 2, otherwise, you have to subtract 1 from it.

Input: num = 14

Output: 6

Explanation:

- 14 is even; divide by 2 and obtain 7.
- 7 is odd; subtract 1 and obtain 6.
- 6 is even; divide by 2 and obtain 3.
- 3 is odd; subtract 1 and obtain 2.
- 2 is even; divide by 2 and obtain 1.
- 1 is odd; subtract 1 and obtain 0.

Input: num = 8

Output: 4

Explanation:

- 8 is even; divide by 2 and obtain 4.
- 4 is even; divide by 2 and obtain 2.
- 2 is even; divide by 2 and obtain 1.
- 1 is odd; subtract 1 and obtain 0.

Input: num = 123

Output: 12

Hints:

```
def numberOfSteps(self, n: int) -> int:
    # write code here
        …
```

1.9 Running Sum of 1D Array

Given an array nums. We define a running sum of an array as runningSum[i] = sum (nums[0]…nums[i]).

Return the running sum of nums.

Input: nums = [1, 2, 3, 4]

Output: [1, 3, 6, 10]

Explanation: Running sum is obtained as follows: [1, 1+2, 1+2+3, 1+2+3+4].

Input: nums = [1, 1, 1, 1, 1]

Output: [1, 2, 3, 4, 5]

Explanation: Running sum is obtained as follows: [1, 1+1, 1+1+1, 1+1+1+1, 1+1+1+1+1].

Input: nums = [3, 1, 2, 10, 1]

Output: [3, 4, 6, 16, 17]

Hints:

```
def runningSum(self, nums: List[int]) -> List[int]:
        # write code here
         …
        return answer
```

1.10 Remove Element

Given an integer array nums and an integer val, remove all occurrences of val in nums in-place. The order of the elements may be changed. Then return the number of elements in nums which are not equal to val. Consider the number of elements in nums which are not equal to val be k, to get accepted, you need to do the following things:

- Change the array nums such that the first k elements of nums contain the elements which are not equal to val. The remaining elements of nums are not important as well as the size of nums.
- Return k.

Input: nums = [3, 2, 2, 3], val = 3

Output: 2, nums = [2, 2, _, _]

Explanation: Your function should return k = 2, with the first two elements of nums being 2.

It does not matter what you leave beyond the returned k (hence they are underscores).

Input: nums = [0,1,2,2,3,0,4,2], val = 2

Output: 5, nums = [0,1,4,0,3,_,_,_]

Explanation: Your function should return k = 5, with the first five elements of nums containing 0, 0, 1, 3, and 4.

Note that the five elements can be returned in any order.

It does not matter what you leave beyond the returned k (hence they are underscores).

Hints:

```
def removeElement(self, nums: List[int], val: int) -> int:
        # write code here
         …
        return len(nums)
```

2. Matrix Operations

2.1 Add Two Matrices

Given two matrices X and Y, the task is to compute the sum of two matrices and then print it in Python.

Input:

```
 X= [[1, 2, 3],
     [4, 5, 6],
     [7, 8, 9]]

Y = [[9, 8, 7],
     [6, 5, 4],
     [3, 2, 1]]
```

Output:

```
 Result = [[10, 10, 10],
           [10, 10, 10],
           [10, 10, 10]]
```

Hints:

```
# Program to add two matrices using nested loop

X = [[1, 2, 3],
   [4, 5, 6],
   [7, 8, 9]]

Y = [[9,8,7],
   [6,5,4],
   [3,2,1]]


result = [[0,0,0],
        [0,0,0],
        [0,0,0]]

# iterate through rows
for i in range(len(X)):
   # write code here
    …

for r in result:
```

```
    print(r)
```

TRY

1. Take input as X = [[10, 20, 30],[41, 52, 63], [47, 58, 69]] Y = [[19,18,17],[66,35,49], [13,21,11]] and verify the results.

2.2 Multiply Two Matrices

Given two matrices X and Y, the task is to compute the multiplication of two matrices and then print it.

Input:

```
 X= [[1, 7, 3],
     [3, 5, 6],
     [6, 8, 9]]

Y = [[1, 1, 1, 2],
     [6, 7, 3, 0],
     [4, 5, 9, 1]]
```

Output:

```
 Result = [[55, 65, 49, 5],
           [57, 68, 72, 12],
           [90, 107, 111, 21]]
```

Hints:

```
# Program to multiply two matrices using list comprehension

# take a 3x3 matrix
A = [[12, 7, 3],
    [4, 5, 6],
    [7, 8, 9]]

# take a 3x4 matrix
B = [[5, 8, 1, 2],
    [6, 7, 3, 0],
    [4, 5, 9, 1]]

# result will be 3x4
# write code here
    …
for r in result:
    print(r)
```

TRY

1. Take input as X = [[11, 0, 30],[-41, -2, 63], [41, -5, -9]] Y = [[19,-48,17],[-6,35,19], [13,1,-9]] and verify the results.

2.3 Transpose of a Matrix

A matrix can be implemented using a nested list. Each element is treated as a row of the matrix. Find the transpose of a matrix in multiple ways.

Input: [[1, 2], [3, 4], [5, 6]]
Output: [[1, 3, 5], [2, 4, 6]]
Explanation: Suppose we are given a matrix

```
[[1, 2],
 [3, 4],
 [5, 6]]
```

Then the transpose of the given matrix will be,

```
[[1, 3, 5],
 [2, 4, 6]]
```

Hints:

```
# Program to multiply two matrices using list comprehension
```

```
# take a 3x3 matrix
A = [[12, 7, 3],
    [4, 5, 6],
    [7, 8, 9]]

# result will be 3x4
# write code here
    ...
for r in result:
    print(r)
```

TRY

1. Take input as X = [[11, 0, 30],[-41, -2, 63], [41, -5, -9]] and verify the results.

2.4 Matrix Product

Matrix product problem we can solve using list comprehension as a potential shorthand to the conventional loops. Iterate and find the product of the nested list and at the end return the cumulative product using function.

Input: The original list: [[1, 4, 5], [7, 3], [4], [46, 7, 3]]
Output: The total element product in lists is: 1622880

Hints:

```
# Matrix Product using list comprehension + loop

def prod(val):
    # write code here
    ...

# initializing list
test_list = [[1, 4, 5], [7, 3], [4], [46, 7, 3]]
```

TRY

1. Take input list: [[1, 4, 5], [7, 3], [4], [46, 7, 3]] and verify the result.

3. Stack

3.1 Stack implementation using List

A stack is a linear data structure that stores items in a Last-In/First-Out (LIFO) or First-In/Last-Out (FILO) manner. In stack, a new element is added at one end and an element is removed from that end only. The insert and delete operations are often called push and pop.

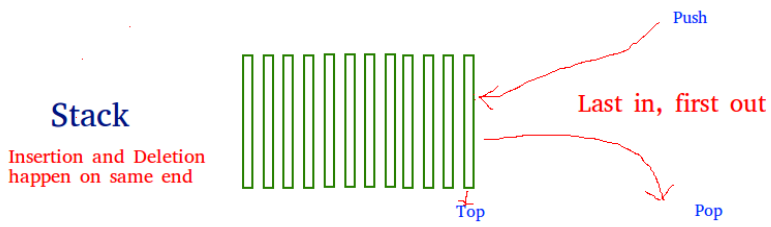

The functions associated with stack are:

- **empty()** – Returns whether the stack is empty
- **size()** – Returns the size of the stack
- **top() / peek()** – Returns a reference to the topmost element of the stack
- **push(a)** – Inserts the element 'a' at the top of the stack
- **pop()** – Deletes the topmost element of the stack

Hints:

```
# Stack implementation using list
```

```
top=0
mymax=5
def createStack():
    stack=[]
    return stack
def isEmpty(stack):
    # write code here
    …
def Push(stack,item):
    # write code here
    …
def Pop(stack):
    # write code here
    …
# create a stack object
stack = createStack()
while True:
    print("1.Push")
    print("2.Pop")
    print("3.Display")
    print("4.Quit")
    # write code here
    …
```

TRY

1. Take input operations as [PUSH(A),PUSH(B),PUSH(C),POP,POP,POP,POP,PUSH(D)] and verify the result.
2. Take input operations as [POP, POP, PUSH (A), PUSH (B), POP, and PUSH(C)] and verify the result.

3.2 Balanced Parenthesis Checking

Given an expression string, write a python program to find whether a given string has balanced parentheses or not.

Input: {[]{()}}

Output: Balanced

Input: [{}{}(]

Output: Unbalanced

Using stack One approach to check balanced parentheses is to use stack. Each time, when an open parentheses is encountered push it in the stack, and when closed parenthesis is encountered, match it with the top of stack and pop it. If stack is empty at the end, return Balanced otherwise, Unbalanced.

Hints:

```
# Check for balanced parentheses in an expression
open_list = ["[","{","("]
close_list = ["]","}",")"]

# Function to check parentheses
def check(myStr):
    # write code here
    …
```

TRY

1. Take input as {[]{()}[][]} and verify the result.
2. Take input as {[]{()}[]{}} and verify the result.

3.3 Evaluation of Postfix Expression

Given a postfix expression, the task is to evaluate the postfix expression. Postfix expression: The expression of the form "a b operator" (ab+) i.e., when a pair of operands is followed by an operator.

Input: str = "2 3 1 * + 9 -"

Output: -4

Explanation: If the expression is converted into an infix expression, it will be 2 + (3 * 1) – 9 = 5 – 9 = -4.

Input: str = "100 200 + 2 / 5 * 7 +"

Output: 757

Procedure for evaluation postfix expression using stack:

- Create a stack to store operands (or values).
- Scan the given expression from left to right and do the following for every scanned element.
  - If the element is a number, push it into the stack.
  - If the element is an operator, pop operands for the operator from the stack. Evaluate the operator and push the result back to the stack.
- When the expression is ended, the number in the stack is the final answer.

Hints:

```
# Evaluate value of a postfix expression

# Class to convert the expression
class Evaluate:

    # Constructor to initialize the class variables
    def __init__(self, capacity):
        self.top = -1
        self.capacity = capacity

        # This array is used a stack
        self.array = []

    # Check if the stack is empty
    def isEmpty(self):
        # write code here
        …
    def peek(self):
        # write code here
        …
    def pop(self):
        # write code here
        …
    def push(self, op):
        # write code here
        …
    def evaluatePostfix(self, exp):
        # write code here
        …
```

```
# Driver code
exp = "231*+9-"
obj = Evaluate(len(exp))

# Function call
print("postfix evaluation: %d" % (obj.evaluatePostfix(exp)))
```

TRY

1. Take input str = “A B + C* D / E +” and verify the result.
2. Take input str = “XYZ- + W+ R / S -” and verify the result.

4. Queue

4.1 Linear Queue using List

Linear queue is a linear data structure that stores items in First in First out (FIFO) manner. With a queue the least recently added item is removed first. A good example of queue is any queue of consumers for a resource where the consumer that came first is served first.

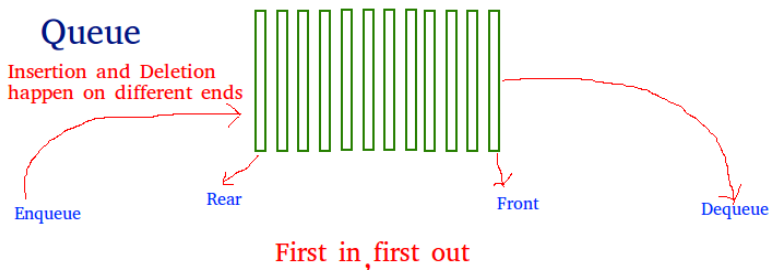

Hints:

```
# Static implementation of linear queue
front=0
rear=0
mymax=5
def createQueue():
    queue=[]   #empty list
    return queue

def isEmpty(queue):
    # write code here
    …
def enqueue(queue,item):  # insert an element into the queue
    # write code here
    …
def dequeue(queue):  #remove an element from the queue
    # write code here
    …
# Driver code
queue = createQueue()
while True:
    print("1.Enqueue")
    print("2.Dequeue")
    print("3.Display")
```

```
    print("4.Quit")
    # write code here
    …
```

TRY

1. Take input operations as [ENQUEUE(A),DEQUEUE(),ENQUEUE(B),DEQUEUE(),ENQUEUE(C),DEQUEUE(),] and verify the result.

2. Take input operations as [ENQUEUE(A), ENQUEUE(B),DEQUEUE(),ENQUEUE(C), DEQUEUE(),ENQUEUE(D), DEQUEUE(), ENQUEUE(C),DEQUEUE(),] and verify the result.

4.2 Stack using Queues

Implement a last-in-first-out (LIFO) stack using only two queues. The implemented stack should support all the functions of a normal stack (push, top, pop, and empty).

- void push(int x) Pushes element x to the top of the stack.
- int pop() Removes the element on the top of the stack and returns it.
- int top() Returns the element on the top of the stack.
- boolean empty() Returns true if the stack is empty, false otherwise.

Input:

["MyStack", "push", "push", "top", "pop", "empty"]

[[], [1], [2], [], [], []]

Output:

[null, null, null, 2, 2, false]

Hints:

```
class MyStack:

    def __init__(self):
        # write code here
        …
    def push(self, x: int) -> None:
        # write code here
        …
    def pop(self) -> int:
        # write code here
        …
    def top(self) -> int:
        # write code here
        …
    def empty(self) -> bool:
        # write code here
        …
# Your MyStack object will be instantiated and called as such:
# obj = MyStack()
# obj.push(x)
# param_2 = obj.pop()
# param_3 = obj.top()
# param_4 = obj.empty()
```

4.3 Implement Queue using Stacks

Implement a first in first out (FIFO) queue using only two stacks. The implemented queue should support all the functions of a normal queue (push, peek, pop, and empty).

- void push(int x) Pushes element x to the back of the queue.
- int pop() Removes the element from the front of the queue and returns it.
- int peek() Returns the element at the front of the queue.
- boolean empty() Returns true if the queue is empty, false otherwise.

Input:

["MyQueue", "push", "push", "peek", "pop", "empty"]

[[], [1], [2], [], [], []]

Output:

[null, null, null, 1, 1, false]

Hints:

```
class MyQueue:

    def __init__(self):
        # write code here
        …
    def push(self, x: int) -> None:
        # write code here
        …
    def pop(self) -> int:
        # write code here
        …
    def peek(self) -> int:
        # write code here
        …

    def empty(self) -> bool:
        # write code here
        …
# Your MyQueue object will be instantiated and called as such:
# obj = MyQueue()
# obj.push(x)
# param_2 = obj.pop()
# param_3 = obj.peek()
# param_4 = obj.empty()
```

4.4 Circular Queue

A Circular Queue is an extended version of a normal queue where the last element of the queue is connected to the first element of the queue forming a circle. The operations are performed based on FIFO (First In First Out) principle. It is also called 'Ring Buffer'.

Operations on Circular Queue:

- **Front:** Get the front item from the queue.
- **Rear:** Get the last item from the queue.
- **enQueue(value)** This function is used to insert an element into the circular queue. In a circular queue, the new element is always inserted at the rear position.

- Check whether the queue is full – [i.e., the rear end is in just before the front end in a circular manner].
- If it is full then display Queue is full.
- If the queue is not full then, insert an element at the end of the queue.
- **deQueue()** This function is used to delete an element from the circular queue. In a circular queue, the element is always deleted from the front position.
- Check whether the queue is Empty.
- If it is empty then display Queue is empty.
- If the queue is not empty, then get the last element and remove it from the queue.

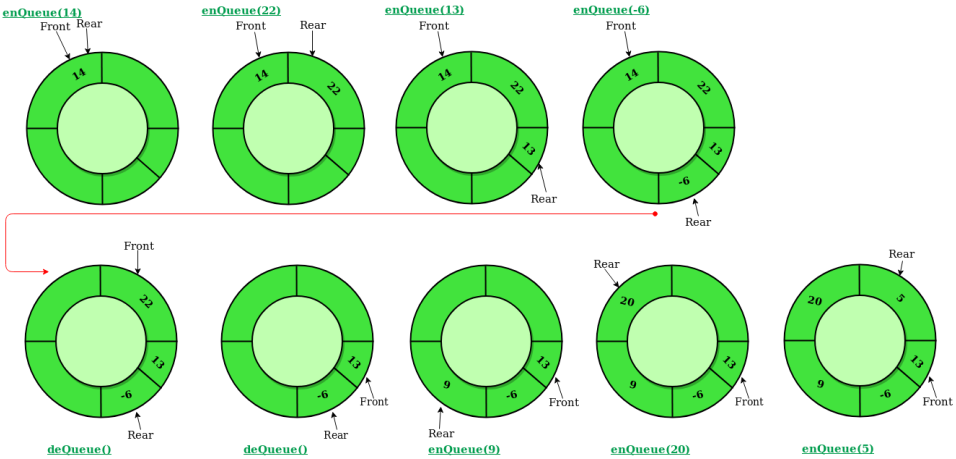

Implement Circular Queue using Array:

1. Initialize an array queue of size **n**, where n is the maximum number of elements that the queue can hold.
2. Initialize two variables front and rear to -1.
3. **Enqueue:** To enqueue an element **x** into the queue, do the following:
   - Increment rear by 1.
   - If **rear** is equal to n, set **rear** to 0.
   - If **front** is -1, set **front** to 0.
   - Set queue[rear] to x.
4. **Dequeue:** To dequeue an element from the queue, do the following:
   - Check if the queue is empty by checking if **front** is -1.
   - If it is, return an error message indicating that the queue is empty.
   - Set **x** to queue [front].
   - If **front** is equal to **rear**, set **front** and **rear** to -1.
   - Otherwise, increment **front** by 1 and if **front** is equal to n, set **front** to 0.
   - Return x.

Hints:

```
class CircularQueue():

    # constructor
    def __init__(self, size): # initializing the class
        self.size = size

        # initializing queue with none
        self.queue = [None for i in range(size)]
        self.front = self.rear = -1

    def enqueue(self, data):
        # Write code here
            …

    def dequeue(self):
        # Write code here
            …
```

```
    def display(self):
            # Write code here
            …

 # Driver Code
ob = CircularQueue(5)
ob.enqueue(14)
ob.enqueue(22)
ob.enqueue(13)
ob.enqueue(-6)
ob.display()
print ("Deleted value = ", ob.dequeue())
print ("Deleted value = ", ob.dequeue())
ob.display()
ob.enqueue(9)
ob.enqueue(20)
ob.enqueue(5)
ob.display()
```

TRY

1. Take input operations as [ENQUEUE(A,B,C,D,E,F),DEQUEUE(),DEQUEUE(),DEQUEUE(),ENQUEUE(G,H,I] and verify the result.

2. Take input operations as [DEQUEUE(),ENQUEUE(A,B,C,D,E,F),DEQUEUE(),ENQUEUE(G,H,I] and verify the result.

5. Graph Representation

5.1 Build a graph

You are given an integer n. Determine if there is an unconnected graph with n vertices that contains at least two connected components and contains the number of edges that is equal to the number of vertices. Each vertex must follow one of these conditions:

- Its degree is less than or equal to 1.
- It's a cut-vertex.

Note:

- The graph must be simple.
- Loops and multiple edges are not allowed.

Input: First line: n

Output: Print Yes if it is an unconnected graph. Otherwise, print No.

Sample Input	Sample Output
3	No

Constraints: $1 \leq n \leq 100$

Explanation: There is only one graph with the number of edges equal to the number of vertices (triangle) which is connected.

5.2 Number of Sink Nodes in a Graph

Given a Directed Acyclic Graph of n nodes (numbered from 1 to n) and m edges. The task is to find the number of sink nodes. A sink node is a node such that no edge emerges out of it.

Input: n = 4, m = 2, edges[] = {{2, 3}, {4, 3}}

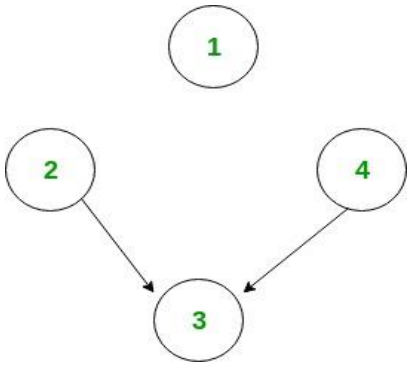

Only node 1 and node 3 are sink nodes.

Input: n = 4, m = 2, edges[] = {{3, 2}, {3, 4}}

Output: 3

The idea is to iterate through all the edges. And for each edge, mark the source node from which the edge emerged out. Now, for each node check if it is marked or not. And count the unmarked nodes.

Algorithm:

1. Make any array A[] of size equal to the number of nodes and initialize to 1.

2. Traverse all the edges one by one, say, u -> v.

   (i) Mark A[u] as 1.

3. Now traverse whole array A[] and count number of unmarked nodes.

Hints:

```
# Program to count number if sink nodes

# Return the number of Sink Nodes.
def countSink(n, m, edgeFrom, edgeTo):
    # Write code here
            …

   return count

# Driver Code
n = 4
m = 2
edgeFrom = [2, 4]
edgeTo = [3, 3]

print(countSink(n, m, edgeFrom, edgeTo))
```

5.3 Connected Components in a Graph

Given n, i.e. total number of nodes in an undirected graph numbered from 1 to n and an integer e, i.e. total number of edges in the graph. Calculate the total number of connected components in the graph. A connected component is a set of vertices in a graph that are linked to each other by paths.

Input: First line of input line contains two integers' n and e. Next e line will contain two integers u and v meaning that node u and node v are connected to each other in undirected fashion.

Output: For each input graph print an integer x denoting total number of connected components.

Sample Input	Sample Output
8 5	3
1 2	
2 3	
2 4	
3 5	
6 7	

Constraints: All the input values are well within the integer range.

5.4 Transpose Graph

Transpose of a directed graph G is another directed graph on the same set of vertices with all of the edges reversed compared to the orientation of the corresponding edges in G. That is, if G contains an edge (u, v) then the converse/transpose/reverse of G contains an edge (v, u) and vice versa. Given a graph (represented as adjacency list), we need to find another graph which is the transpose of the given graph.

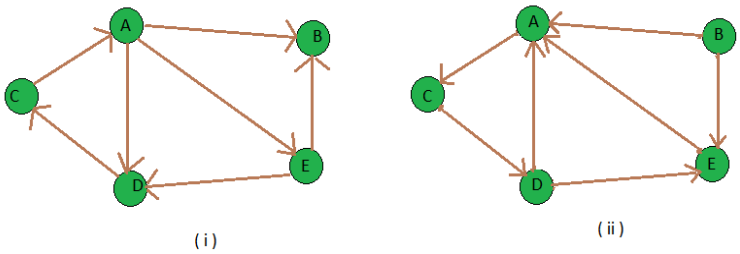

Input: figure (i) is the input graph.

Output: figure (ii) is the transpose graph of the given graph.
0--> 2
1--> 0 4
2--> 3
3--> 0 4
4--> 0

Explanation: We traverse the adjacency list and as we find a vertex v in the adjacency list of vertex u which indicates an edge from u to v in main graph, we just add an edge from v to u in the transpose graph i.e. add u in the adjacency list of vertex v of the new graph. Thus traversing lists of all vertices of main graph we can get the transpose graph.

Hints:

```
# find transpose of a graph.
# function to add an edge from vertex source to vertex dest
def addEdge(adj, src, dest):
    adj[src].append(dest)

# function to print adjacency list of a graph
def displayGraph(adj, v):
     …
       print()

# function to get Transpose of a graph taking adjacency list of given graph and that of Transpose graph
def transposeGraph(adj, transpose, v):
    # traverse the adjacency list of given graph and for each edge (u, v) add
    # an edge (v, u) in the transpose graph's adjacency list
    …

# Driver Code
v = 5
adj = [[] for i in range(v)]
addEdge(adj, 0, 1)
addEdge(adj, 0, 4)
addEdge(adj, 0, 3)
addEdge(adj, 2, 0)
addEdge(adj, 3, 2)
addEdge(adj, 4, 1)
addEdge(adj, 4, 3)

# Finding transpose of graph represented by adjacency list adj[]
transpose = [[]for i in range(v)]
transposeGraph(adj, transpose, v)

# Displaying adjacency list of transpose graph i.e. b
```

```
displayGraph(transpose, v)
```

TRY

1. Take input operations as addEdge(A, B), addEdge(A, D), addEdge(A, C), addEdge(C, A),addEdge(A, D), addEdge(C, B), addEdge(B, C) and verify the result.

5.5 Counting Triplets

You are given an undirected, complete graph G that contains N vertices. Each edge is colored in either white or black. You are required to determine the number of triplets (i, j, k) ($1 \le i < j < k \le N$) of vertices such that the edges (i, j), (j, k), (i, k) are of the same color.

There are M white edges and (N (N-1)/2) – M black edges.

Input:

First line: Two integers – N and M ($3 \le N \le 10^5$, $1 \le M \le 3 * 10^5$)

$(i+1)^{th}$ line: Two integers – u_i and v_i ($1 \le u_i, v_i \le N$) denoting that the edge (u_i, v_i) is white in color.

Note: The conditions $(u_i, v_i) \neq (u_j, v_j)$ and $(u_i, v_i) \neq (v_j, u_j)$ are satisfied for all $1 \le i < j \le M$.

.**Output:** Print an integer that denotes the number of triples that satisfy the mentioned condition.

Sample Input	Sample Output
5 3	4
1 5	
2 5	
3 5	

Explanation: The triplets are: {(1, 2, 3), (1, 2, 4), (2, 3, 4), (1, 3, 4)}

The graph consisting of only white edges:

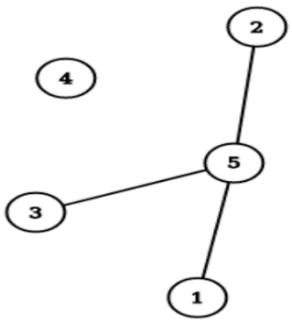

The graph consisting of only black edges:

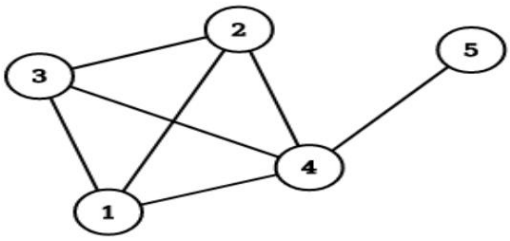

6. Graph Routing Algorithms

6.1 Seven Bridges of Konigsberg

There was 7 bridges connecting 4 lands around the city of Königsberg in Prussia. Was there any way to start from any of the land and go through each of the bridges once and only once? Euler first introduced graph theory to solve this problem. He considered each of the lands as a node of a graph and each bridge in between as an edge in between. Now he calculated if there is any Eulerian Path in that graph. If there is an Eulerian path then there is a solution otherwise not.

There are n nodes and m bridges in between these nodes. Print the possible path through each node using each edges (if possible), traveling through each edges only once.

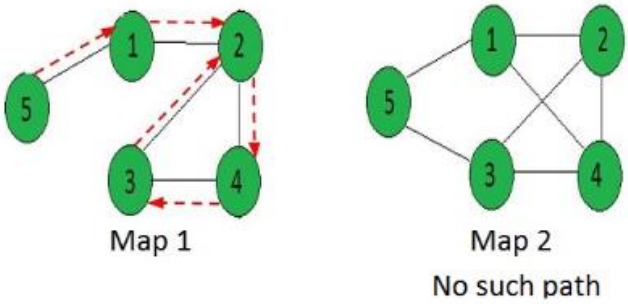

Input: [[0, 1, 0, 0, 1],
[1, 0, 1, 1, 0],
[0, 1, 0, 1, 0],
[0, 1, 1, 0, 0],
[1, 0, 0, 0, 0]]

Output: 5 -> 1 -> 2 -> 4 -> 3 -> 2

Input: [[0, 1, 0, 1, 1],
[1, 0, 1, 0, 1],
[0, 1, 0, 1, 1],
[1, 1, 1, 0, 0],
[1, 0, 1, 0, 0]]

Output: "No Solution"

Hints:

```
# A Python program to print Eulerian trail in a
# given Eulerian or Semi-Eulerian Graph
from collections import defaultdict

class Graph:
# Constructor and destructor
def __init__(self, V):
self.V = V
 self.adj = defaultdict(list)

# functions to add and remove edge
```

```
def addEdge(self, u, v):
def rmvEdge(self, u, v):
  …
# Methods to print Eulerian tour
def printEulerTour(self):
 # Find a vertex with odd degree
  …
 # Print tour starting from oddv
self.printEulerUtil(u)
 print()
def printEulerUtil(self, u):
 # Recur for all the vertices adjacent to this vertex
for v in self.adj[u]:
 # If edge u-v is not removed and it's a valid next edge
# The function to check if edge u-v can be considered as next edge in Euler Tout
 def isValidNextEdge(self, u, v):
    # The edge u-v is valid in one of the following two cases:

    # 1) If v is the only adjacent vertex of u
        …

    # 2) If there are multiple adjacents, then u-v is not a bridge
    # Do following steps to check if u-v is a bridge
    # 2.a) count of vertices reachable from u
       …

    # 2.b) Remove edge (u, v) and after removing
    # the edge, count vertices reachable from u
        …

    # 2.c) Add the edge back to the graph
        self.addEdge(u, v)

    # 2.d) If count1 is greater, then edge (u, v) is a bridge
        return False if count1 > count2 else True

    # A DFS based function to count reachable vertices from v

    def DFSCount(self, v, visited):
        # Mark the current node as visited
        …
        # Recur for all the vertices adjacent to this vertex
        …
    # utility function to form edge between two vertices source and dest
    def makeEdge(src, dest):
        graph.addEdge(src, dest)

# Driver code
# Let us first create and test graphs shown in above figure
g1 = Graph(4)
g1.addEdge(0, 1)
g1.addEdge(0, 2)
g1.addEdge(1, 2)
g1.addEdge(2, 3)
g1.printEulerTour()

g3 = Graph(4)
g3.addEdge(0, 1)
```

```
g3.addEdge(1, 0)
g3.addEdge(0, 2)
g3.addEdge(2, 0)
g3.addEdge(2, 3)
g3.addEdge(3, 1)
g3.printEulerTour()
```

TRY

1. Take input: [[1, 0, 1, 0, 1], [1, 0, 1, 0, 0], [1, 1, 0, 1, 0], [0, 0, 1, 0, 0], [1, 0, 1, 0, 0]] and verify the result.
2. Take input: [[0, 0, 1, 0, 1], [0, 0, 1, 0, 0], [1, 0, 0, 1, 0], [1, 0, 1, 0, 0], [1, 1, 1, 0, 0]] and verify the result.

6.2 Hamiltonian Cycle

The Hamiltonian cycle of undirected graph G = <V, E> is the cycle containing each vertex in V. If graph contains a Hamiltonian cycle, it is called Hamiltonian graph otherwise it is non-Hamiltonian.

Hamiltonian Path in an undirected graph is a path that visits each vertex exactly once. A Hamiltonian cycle (or Hamiltonian circuit) is a Hamiltonian path such that there is an edge (in the graph) from the last vertex to the first vertex of the Hamiltonian path. Consider a graph G, and determine whether a given graph contains Hamiltonian cycle or not. If it contains, then prints the path. Following are the input and output of the required function.

Input: A 2D array graph [V][V] where V is the number of vertices in graph and graph [V][V] is adjacency matrix representation of the graph. A value graph[i][j] is 1 if there is a direct edge from i to j, otherwise graph[i][j] is 0.

Output: An array path [V] that should contain the Hamiltonian Path. Path [i] should represent the ith vertex in the Hamiltonian Path. The code should also return false if there is no Hamiltonian Cycle in the graph.

For example, a Hamiltonian Cycle in the following graph is {0, 1, 2, 4, 3, 0}.

```
(0)--(1)--(2)
|   / \   |
|  /   \  |
| /     \ |
(3)-------(4)
```

And the following graph doesn't contain any Hamiltonian Cycle.

```
(0)--(1)--(2)
|   / \   |
|  /   \  |
| /     \ |
(3)       (4)
```

Backtracking Algorithm: Create an empty path array and add vertex 0 to it. Add other vertices, starting from the vertex 1. Before adding a vertex, check for whether it is adjacent to the previously added vertex and not already added. If we find such a vertex, we add the vertex as part of the solution. If we do not find a vertex then we return false.

Hints:

```
# Python program for solution of Hamiltonian cycle problem

class Graph():
```

```
    def __init__(self, vertices):
        self.graph = [[0 for column in range(vertices)]
                      for row in range(vertices)]
        self.V = vertices

    def isSafe(self, v, pos, path):
        # Check if current vertex and last vertex in path are adjacent
      …

    # A recursive utility function to solve Hamiltonian cycle problem
    def hamCycleUtil(self, path, pos):
        …

    def hamCycle(self):
        …

    def printSolution(self, path):
        print ("Solution Exists: Following","is one Hamiltonian Cycle")
        for vertex in path:
            print (vertex, end = " ")
        print (path[0], "\n")

# Driver Code

''' Let us create the following graph
    (0)--(1)--(2)
    |    / \   |
    |   /   \  |
    |  /     \ |
    (3)-------(4) '''
g1 = Graph(5)
g1.graph = [ [0, 1, 0, 1, 0], [1, 0, 1, 1, 1],
            [0, 1, 0, 0, 1,],[1, 1, 0, 0, 1],
            [0, 1, 1, 1, 0], ]

# Print the solution
g1.hamCycle();

''' Let us create the following graph
    (0)--(1)--(2)
    |    / \   |
    |   /   \  |
    |  /     \ |
    (3)     (4) '''
g2 = Graph(5)
g2.graph = [ [0, 1, 0, 1, 0], [1, 0, 1, 1, 1],
        [0, 1, 0, 0, 1,], [1, 1, 0, 0, 0],
        [0, 1, 1, 0, 0], ]

# Print the solution
g2.hamCycle();
```

TRY

1. Take a graph = [[1, 1, 0, 1, 0], [1, 1, 1, 1, 1], [0, 1, 0, 1, 1,], [1, 1, 0, 1, 0], [0, 1, 1, 1, 0],] and verify the results.

6.3 Number of Hamiltonian Cycle

Given an undirected complete graph of N vertices where N > 2. The task is to find the number of different Hamiltonian cycle of the graph.

Complete Graph: A graph is said to be complete if each possible vertices is connected through an Edge.

Hamiltonian Cycle: It is a closed walk such that each vertex is visited at most once except the initial vertex. and it is not necessary to visit all the edges.

Formula: (N – 1)! / 2

Input: N = 6

Output: Hamiltonian cycles = 60

Input: N = 4

Output: Hamiltonian cycles = 3

Explanation: Let us take the example of N = 4 complete undirected graph, The 3 different Hamiltonian cycle is as shown below:

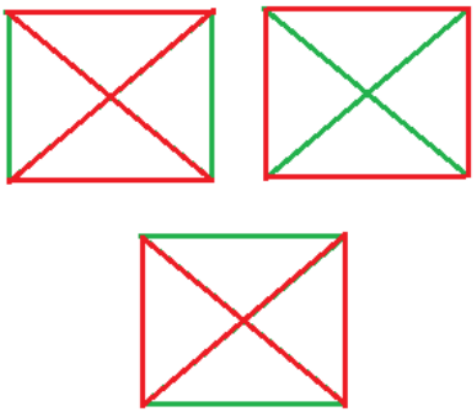

Hints:

```
# Number of Hamiltonian cycles
import math as mt

# Function that calculates number of Hamiltonian cycle
def Cycles(N):
    …

# Driver code
N = 5
Number = Cycles(N)
print("Hamiltonian cycles = ", Number)
```

TRY

1. Take an input N=7 and verify the results.
2. Take an input N=10 and verify the results.

7. Shortest Path Algorithms

7.1 Travelling Salesman Problem

Given a set of cities and the distance between every pair of cities, the problem is to find the shortest possible route that visits every city exactly once and returns to the starting point. The problem statement gives a list of cities along with the distances between each city.

Objective: To start from the origin city, visit other cities only once, and return to the original city again. Our target is to find the shortest possible path to complete the round-trip route.

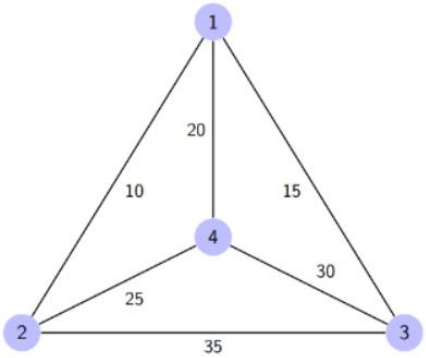

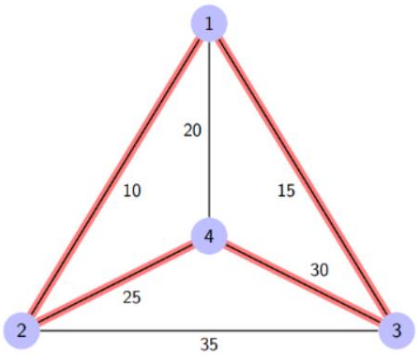

Here a graph is given where 1, 2, 3, and 4 represent the cities, and the weight associated with every edge represents the distance between those cities. The goal is to find the shortest possible path for the tour that starts from the origin city, traverses the graph while only visiting the other cities or nodes once, and returns to the origin city.
For the above graph, the optimal route is to follow the minimum cost path: 1 – 2 – 4 – 3 - 1. And this shortest route would cost 10 + 25 + 30 + 15 =80

Algorithm for Traveling Salesman Problem: We will use the dynamic programming approach to solve the Travelling Salesman Problem (TSP).

- A graph G=(V, E), which is a set of vertices and edges.
- V is the set of vertices.
- E is the set of edges.
- Vertices are connected through edges.
- Dist(i,j) denotes the non-negative distance between two vertices, i and j.

Let's assume S is the subset of cities and belongs to {1, 2, 3, …, n} where 1, 2, 3…n are the cities and i, j are two cities in that subset. Now cost(i, S, j) is defined in such a way as the length of the shortest path visiting node in S, which is exactly once having the starting and ending point as i and j respectively.

For example, cost (1, {2, 3, 4}, 1) denotes the length of the shortest path where:

- Starting city is 1
- Cities 2, 3, and 4 are visited only once
- The ending point is 1

The dynamic programming algorithm would be:

- Set cost(i,, i) = 0, which means we start and end at i, and the cost is 0.
- When |S| > 1, we define cost(i, S, 1) = ∝ where i !=1 . Because initially, we do not know the exact cost to reach city i to city 1 through other cities.
- Now, we need to start at 1 and complete the tour. We need to select the next city in such a way-
- cost(i, S, j) = min cost (i, S−{i}, j) + dist(i, j) where i ∈ S and i ≠ j

For the given figure above, the adjacency matrix would be the following:

dist(i, j)	1	2	3	4
1	0	10	15	20
2	10	0	35	25
3	15	35	0	30
4	20	25	30	0

Now S = {1, 2, 3, 4}. There are four elements. Hence the number of subsets will be 2^4 or 16. Those subsets are-

1) |S| = Null:
{Φ}

2) |S| = 1:
{{1}, {2}, {3}, {4}}

3) |S| = 2:
{{1, 2}, {1, 3}, {1, 4}, {2, 3}, {2, 4}, {3, 4}}

4) |S| = 3:
{{1, 2, 3}, {1, 2, 4}, {2, 3, 4}, {1, 3, 4}}

5) |S| = 4:
{{1, 2, 3, 4}}

As we are starting at 1, we could discard the subsets containing city 1. The algorithm calculation steps:

1) |S| = Φ:
cost (2, Φ, 1) = dist(2, 1) = 10
cost (3, Φ, 1) = dist(3, 1) = 15
cost (4, Φ, 1) = dist(4, 1) = 20

2) |S| = 1:
cost (2, {3}, 1) = dist(2, 3) + cost (3, Φ, 1) = 35+15 = 50
cost (2, {4}, 1) = dist(2, 4) + cost (4, Φ, 1) = 25+20 = 45
cost (3, {2}, 1) = dist(3, 2) + cost (2, Φ, 1) = 35+10 = 45
cost (3, {4}, 1) = dist(3, 4) + cost (4, Φ, 1) = 30+20 = 50
cost (4, {2}, 1) = dist(4, 2) + cost (2, Φ, 1) = 25+10 = 35
cost (4, {3}, 1) = dist(4, 3) + cost (3, Φ, 1) = 30+15 = 45

3) |S| = 2:
cost (2, {3, 4}, 1) = min [dist[2,3] + Cost(3,{4},1) = 35+50 = 85,
dist[2,4]+Cost(4,{3},1) = 25+45 = 70] = 70
cost (3, {2, 4}, 1) = min [dist[3,2] + Cost(2,{4},1) = 35+45 = 80,
dist[3,4]+Cost(4,{2},1) = 30+35 = 65] = 65
cost (4, {2, 3}, 1) = min [dist[4,2] + Cost(2,{3},1) = 25+50 = 75
dist[4,3] + Cost(3,{2},1) = 30+45 = 75] = 75

4) |S| = 3:
cost (1, {2, 3, 4}, 1) = min [dist[1,2]+Cost(2,{3,4},1) = 10+70 = 80
dist[1,3]+Cost(3,{2,4},1) = 15+65 = 80
dist[1,4]+Cost(4,{2,3},1) = 20+75 = 95] = 80

So the optimal solution would be 1-2-4-3-1

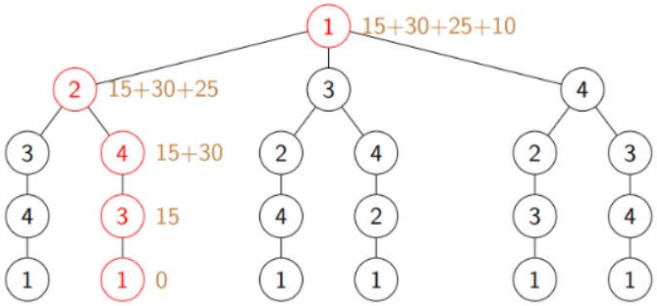

Hints:

```
from sys import maxsize
from itertools, import permutations
V = 4
def tsp(graph, s):
                …

# Driver code
graph = [[0, 10, 15, 20], [10, 0, 35, 25], [15, 35, 0, 30], [20, 25, 30, 0]]
s = 0
print(tsp(graph, s))
```

TRY

1. Take a below table values and verify the results.

dist(i, j)	1	2	3	4
1	0	40	25	40
2	20	0	35	25
3	25	35	0	60
4	40	25	30	0

7.2 Shortest Paths from Source to all Vertices (Dijkstra's Algorithm)

Given a graph and a source vertex in the graph, find the shortest paths from the source to all vertices in the given graph.

Input: src = 0, the graph is shown below.

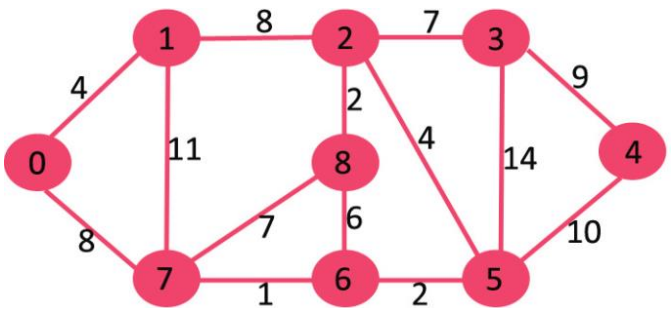

Output: 0 4 12 19 21 11 9 8 14

Explanation: The distance from 0 to 1 = 4.
The minimum distance from 0 to 2 = 12. 0->1->2
The minimum distance from 0 to 3 = 19. 0->1->2->3

The minimum distance from 0 to 4 = 21. 0->7->6->5->4
The minimum distance from 0 to 5 = 11. 0->7->6->5
The minimum distance from 0 to 6 = 9. 0->7->6
The minimum distance from 0 to 7 = 8. 0->7
The minimum distance from 0 to 8 = 14. 0->1->2->8

Hints:

```
# Dijkstra's single source shortest path algorithm. The program is for adjacency matrix representation of the graph

# Library for INT_MAX
import sys

class Graph():
    def __init__(self, vertices):
        self.V = vertices
        self.graph = [[0 for column in range(vertices)]
                      for row in range(vertices)]

    def printSolution(self, dist):
        print("Vertex \tDistance from Source")
        for node in range(self.V):
            print(node, "\t", dist[node])

    # A utility function to find the vertex with minimum distance value,
    # from the set of vertices not yet included in shortest path tree
    def minDistance(self, dist, sptSet):
        …

    # Function that implements Dijkstra's single source shortest path
    # algorithm for a graph represented using adjacency matrix representation
    def dijkstra(self, src):
        …


# Driver's code
g = Graph(9)
g.graph = [[0, 4, 0, 0, 0, 0, 0, 8, 0],
           [4, 0, 8, 0, 0, 0, 0, 11, 0],
           [0, 8, 0, 7, 0, 4, 0, 0, 2],
           [0, 0, 7, 0, 9, 14, 0, 0, 0],
           [0, 0, 0, 9, 0, 10, 0, 0, 0],
           [0, 0, 4, 14, 10, 0, 2, 0, 0],
           [0, 0, 0, 0, 0, 2, 0, 1, 6],
           [8, 11, 0, 0, 0, 0, 1, 0, 7],
           [0, 0, 2, 0, 0, 0, 6, 7, 0]
          ]

g.dijkstra(0)
```

TRY

1. Take a below graph and verify the results.

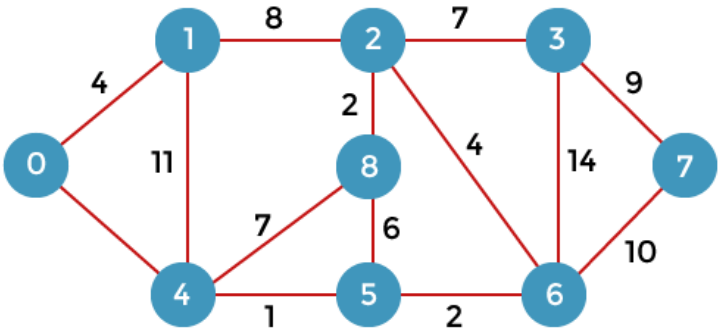

7.3 Shortest Cycle in an Undirected Unweighted Graph

Given an undirected unweighted graph. The task is to find the length of the shortest cycle in the given graph. If no cycle exists print -1.

Input: Consider the graph given below

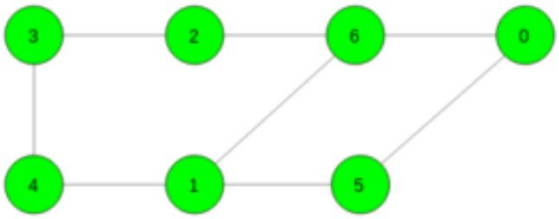

Output: 4

Cycle 6 -> 1 -> 5 -> 0 -> 6

Input: Consider the graph given below

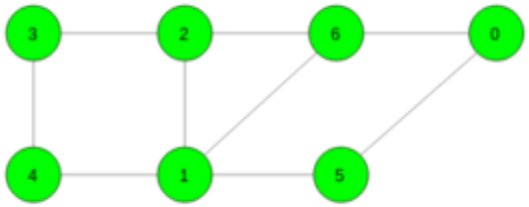

Output: 3

Cycle 6 -> 1 -> 2 -> 6

Hints:

```
from sys import maxsize as INT_MAX
from collections import deque

N = 100200

gr = [0] * N
for i in range(N):
    gr[i] = []

# Function to add edge
def add_edge(x: int, y: int) -> None:
```

```
    global gr
    gr[x].append(y)
    gr[y].append(x)

# Function to find the length of the shortest cycle in the graph
def shortest_cycle(n: int) -> int:

    # To store length of the shortest cycle
    ans = INT_MAX

    # For all vertices
    # write code here
    …

    # If graph contains no cycle
    if ans == INT_MAX:
        return -1

    # If graph contains cycle
    else:
        return ans

# Driver Code
# Number of vertices
n = 7
# Add edges
add_edge(0, 6)
add_edge(0, 5)
add_edge(5, 1)
add_edge(1, 6)
add_edge(2, 6)
add_edge(2, 3)
add_edge(3, 4)
add_edge(4, 1)

# Function call
print(shortest_cycle(n))
```

TRY

1. Take a below graph and verify the results.

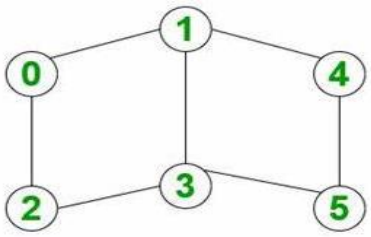

7.4 Count Unique and all Possible Paths in a M x N Matrix

Count unique paths: The problem is to count all unique possible paths from the top left to the bottom right of a M X N matrix with the constraints that from each cell you can either move only to the right or down.

Input: M = 2, N = 2

Output: 2

Explanation: There are two paths
(0, 0) -> (0, 1) -> (1, 1)
(0, 0) -> (1, 0) -> (1, 1)

Input: M = 2, N = 3

Output: 3

Explanation: There are three paths
(0, 0) -> (0, 1) -> (0, 2) -> (1, 2)
(0, 0) -> (0, 1) -> (1, 1) -> (1, 2)
(0, 0) -> (1, 0) -> (1, 1) -> (1, 2)

Count all possible paths: We can recursively move to right and down from the start until we reach the destination and then add up all valid paths to get the answer.

Procedure:

- Create a recursive function with parameters as row and column index
- Call this recursive function for N-1 and M-1
- In the recursive function
    - If N == 1 or M == 1 then return 1
    - else call the recursive function with (N-1, M) and (N, M-1) and return the sum of this
- Print the answer

Hints:

```
# Python program to count all possible paths from top left to bottom right

# Function to return count of possible paths to reach cell at row number m and column number n from the topmost leftmost cell (cell at 1, 1)

def numberOfPaths(m, n):
    …

# Driver program to test above function
m = 3
n = 3
print(numberOfPaths(m, n))
```

TRY

1. Take input **:** M = 3, N = 2 and verify the results.
2. Take input **:** M = 2, N = 1 and verify the results.

8. Graph Coloring

8.1 Graph Coloring using Greedy Algorithm

Greedy algorithm is used to assign colors to the vertices of a graph. It doesn't guarantee to use minimum colors, but it guarantees an upper bound on the number of colors. The basic algorithm never uses more than d+1 colors where d is the maximum degree of a vertex in the given graph.

Basic Greedy Coloring Algorithm:

1. Color first vertex with first color.
2. Do following for remaining V-1 vertices.
    a) Consider the currently picked vertex and color it with the lowest numbered color that has not been used on any previously colored vertices adjacent to it. If all previously used colors appear on vertices adjacent to v, assign a new color to it.

Hints:

```
# Implement greedy algorithm for graph coloring
```

```
def addEdge(adj, v, w):
    adj[v].append(w)
    # Note: the graph is undirected
    adj[w].append(v)
    return adj

# Assigns colors (starting from 0) to all
# vertices and prints the assignment of colors
def greedyColoring(adj, V):
    …

# Driver Code
g1 = [[] for i in range(5)]
g1 = addEdge(g1, 0, 1)
g1 = addEdge(g1, 0, 2)
g1 = addEdge(g1, 1, 2)
g1 = addEdge(g1, 1, 3)
g1 = addEdge(g1, 2, 3)
g1 = addEdge(g1, 3, 4)
print("Coloring of graph 1 ")
greedyColoring(g1, 5)

g2 = [[] for i in range(5)]
g2 = addEdge(g2, 0, 1)
g2 = addEdge(g2, 0, 2)
g2 = addEdge(g2, 1, 2)
g2 = addEdge(g2, 1, 4)
g2 = addEdge(g2, 2, 4)
g2 = addEdge(g2, 4, 3)
print("\nColoring of graph 2")
greedyColoring(g2, 5)
```

Output:
Coloring of graph 1
Vertex 0 ---> Color 0
Vertex 1 ---> Color 1
Vertex 2 ---> Color 2
Vertex 3 ---> Color 0
Vertex 4 ---> Color 1

Coloring of graph 2
Vertex 0 ---> Color 0
Vertex 1 ---> Color 1
Vertex 2 ---> Color 2
Vertex 3 ---> Color 0
Vertex 4 ---> Color 3

8.2 Coloring a Cycle Graph

Given the number of vertices in a Cyclic Graph. The task is to determine the Number of colors required to color the graph so that no two adjacent vertices have the same color.

Approach:

- If the no. of vertices is Even then it is Even Cycle and to color such graph we require 2 colors.
- If the no. of vertices is Odd then it is Odd Cycle and to color such graph we require 3 colors.

Input: Vertices = 3
Output: No. of colors require is: 3

Input: vertices = 4
Output: No. of colors require is: 2

Example 1: Even Cycle: Number of vertices = 4

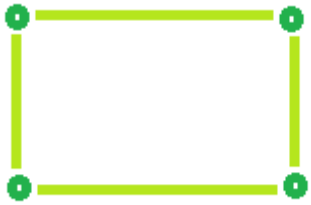

Color required = 2

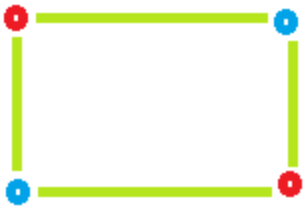

Example 2: Odd Cycle: Number of vertices = 5

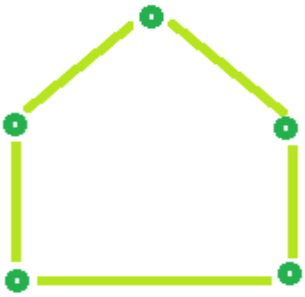

Color required = 3

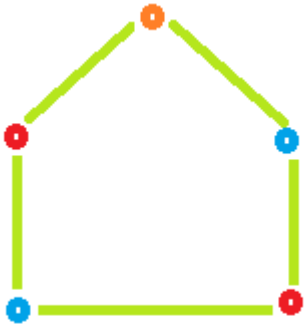

Hints:

```
# Find the number of colors required to color a cycle graph

# Function to find Color required.
def Color(vertices):
    …

# Driver Code
vertices = 3
print ("No. of colors require is:", Color(vertices))
```

8.3 m Coloring Problem

Given an undirected graph and a number m, determine if the graph can be colored with at most m colors such that no two adjacent vertices of the graph are colored with the same color.

Note: Here coloring of a graph means the assignment of colors to all vertices
Following is an example of a graph that can be colored with 3 different colors:

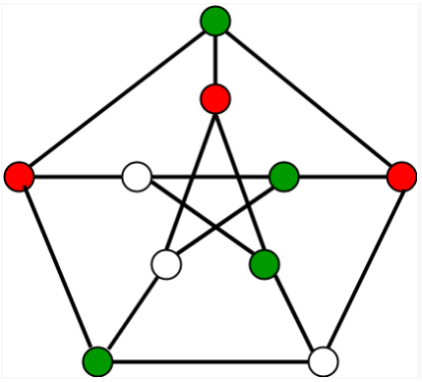

Input: graph = {0, 1, 1, 1},
{1, 0, 1, 0},
{1, 1, 0, 1},
{1, 0, 1, 0}
Output: Solution Exists: Following are the assigned colors: 1 2 3 2
Explanation: By coloring the vertices with following colors, adjacent vertices does not have same colors

Input: graph = {1, 1, 1, 1},
{1, 1, 1, 1},
{1, 1, 1, 1},
{1, 1, 1, 1}
Output: Solution does not exist
Explanation: No solution exits

Generate all possible configurations of colors. Since each node can be colored using any of the m available colors, the total number of color configurations possible is mV. After generating a configuration of color, check if the adjacent vertices have the same color or not. If the conditions are met, print the combination and break the loop
Follow the given steps to solve the problem:

- Create a recursive function that takes the current index, number of vertices and output color array
- If the current index is equal to number of vertices. Check if the output color configuration is safe, i.e check if the adjacent vertices do not have same color. If the conditions are met, print the configuration and break
- Assign a color to a vertex (1 to m)
- For every assigned color recursively call the function with next index and number of vertices
- If any recursive function returns true break the loop and returns true.

Hints:

```
# Number of vertices in the graph
# define 4 4

# check if the colored graph is safe or not


def isSafe(graph, color):
    # check for every edge
    for i in range(4):
        for j in range(i + 1, 4):
            if (graph[i][j] and color[j] == color[i]):
                return False
    return True


def graphColoring(graph, m, i, color):
    # write your code here
```

```
    …

# /* A utility function to print solution */

def printSolution(color):
    print("Solution Exists:" " Following are the assigned colors ")
    for i in range(4):
        print(color[i], end=" ")


# Driver code
# /* Create following graph and test whether it is 3 colorable
# (3)---(2)
# |   /  |
# |  /   |
# | /    |
# (0)---(1)
# */
graph = [
        [0, 1, 1, 1],
        [1, 0, 1, 0],
        [1, 1, 0, 1],
        [1, 0, 1, 0],
        ]
m = 3  # Number of colors

# Initialize all color values as 0.
# This initialization is needed
# correct functioning of isSafe()
color = [0 for i in range(4)]

# Function call
if (not graphColoring(graph, m, 0, color)):
        print("Solution does not exist")
```

8.4 Edge Coloring of a Graph

Edge coloring of a graph is an assignment of "colors" to the edges of the graph so that no two adjacent edges have the same color with an optimal number of colors. Two edges are said to be adjacent if they are connected to the same vertex. There is no known polynomial time algorithm for edge-coloring every graph with an optimal number of colors.

Input: u1 = 1, v1 = 4
u2 = 1, v2 = 2
u3 = 2, v3 = 3
u4 = 3, v4 = 4

Output: Edge 1 is of color 1
Edge 2 is of color 2
Edge 3 is of color 1
Edge 4 is of color 2

The above input shows the pair of vertices (u_i, v_i) who have an edge between them. The output shows the color assigned to the respective edges.

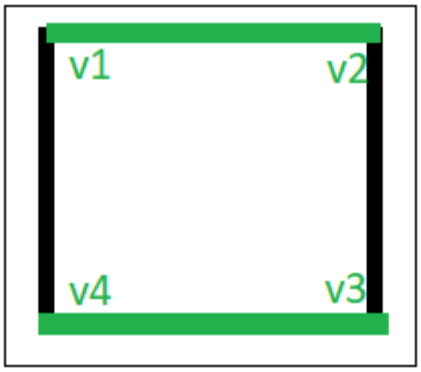

Edge colorings are one of several different types of graph coloring problems. The above figure of a Graph shows an edge coloring of a graph by the colors green and black, in which no adjacent edge have the same color.

Algorithm:

1. Use BFS traversal to start traversing the graph.
2. Pick any vertex and give different colors to all of the edges connected to it, and mark those edges as colored.
3. Traverse one of it's edges.
4. Repeat step to with a new vertex until all edges are colored.

Hints:

```
# Edge Coloring

from queue import Queue

# function to determine the edge colors
def colorEdges(ptr, gra, edgeColors, isVisited):
        # Write your code here
        …


# Driver Function
empty=set()
# declaring vector of vector of pairs, to define Graph
gra=[]
edgeColors=[]
isVisited=[False]*100000

ver = 4
edge = 4
gra=[[] for _ in range(ver)]
edgeColors=[-1]*edge
gra[0].append((1, 0))
gra[1].append((0, 0))
gra[1].append((2, 1))
gra[2].append((1, 1))
gra[2].append((3, 2))
gra[3].append((2, 2))
gra[0].append((3, 3))
gra[3].append((0, 3))
colorEdges(0, gra, edgeColors, isVisited)

# printing all the edge colors
for i in range(edge):
   print("Edge {} is of color {}".format(i + 1,edgeColors[i] + 1))
```

TRY

1. Write a program to implement graph coloring and edge coloring by consider the below graph and verify the results.

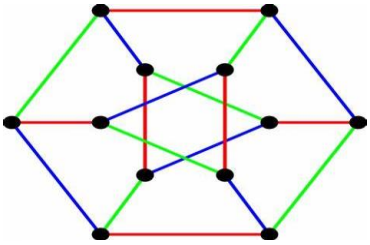
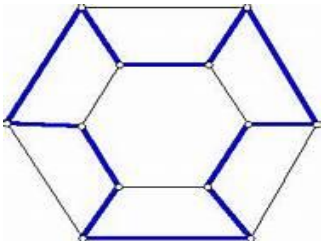
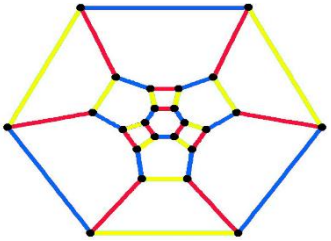

9. Graph Traversal

9.1 Breadth First Search

The **Breadth First Search (BFS)** algorithm is used to search a graph data structure for a node that meets a set of criteria. It starts at the root of the graph and visits all nodes at the current depth level before moving on to the nodes at the next depth level.
For a given graph G, print BFS traversal from a given source vertex.

Hints:

```
# BFS traversal from a given source vertex.

from collections import defaultdict

# This class represents a directed graph using adjacency list representation
class Graph:

    # Constructor
    def __init__(self):
        # Default dictionary to store graph
        self.graph = defaultdict(list)

    # Function to add an edge to graph
    def addEdge(self, u, v):
        self.graph[u].append(v)

    # Function to print a BFS of graph
    def BFS(self, s):
            # Write your code here
            …


# Create a graph given in the above diagram
g = Graph()
g.addEdge(0, 1)
g.addEdge(0, 2)
g.addEdge(1, 2)
g.addEdge(2, 0)
g.addEdge(2, 3)
g.addEdge(3, 3)

print("Following is Breadth First Traversal" " (starting from vertex 2)")
g.BFS(2)
```

Output: Following is Breadth First Traversal (starting from vertex 2)
2 0 3 1

9.2 Depth First Search

Depth First Traversal (or DFS) for a graph is similar to Depth First Traversal of a tree. The only catch here is, that, unlike trees, graphs may contain cycles (a node may be visited twice). To avoid processing a node more than once, use a boolean visited array. A graph can have more than one DFS traversal.

For a given graph G, print DFS traversal from a given source vertex.

Input: n = 4, e = 6
0 -> 1, 0 -> 2, 1 -> 2, 2 -> 0, 2 -> 3, 3 -> 3

Output: DFS from vertex 1: 1 2 0 3

Explanation:
DFS Diagram:

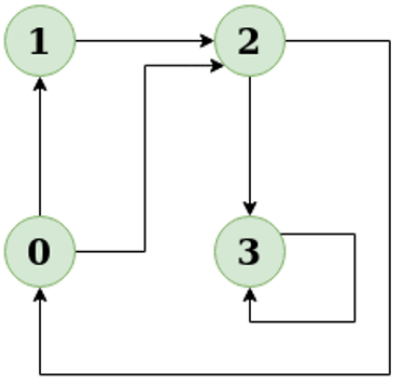

Input: n = 4, e = 6
2 -> 0, 0 -> 2, 1 -> 2, 0 -> 1, 3 -> 3, 1 -> 3

Output: DFS from vertex 2: 2 0 1 3

Explanation:
DFS Diagram:

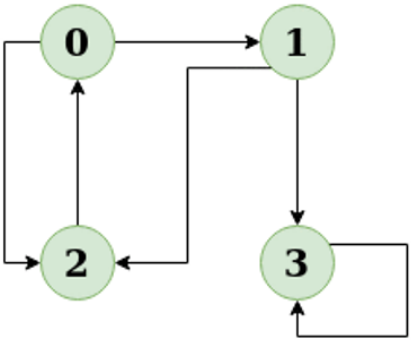

Hints:

```
# DFS traversal from a given graph
from collections import defaultdict

# This class represents a directed graph using adjacency list representation
class Graph:
    # Constructor
    def __init__(self):
        # Default dictionary to store graph
        self.graph = defaultdict(list)


    # Function to add an edge to graph
    def addEdge(self, u, v):
        self.graph[u].append(v)


    # A function used by DFS
    def DFSUtil(self, v, visited):
        …
```

```
    # The function to do DFS traversal. It uses recursive DFSUtil()

    def DFS(self, v):
            # Write your code here
        …

# Driver's code
g = Graph()
g.addEdge(0, 1)
g.addEdge(0, 2)
g.addEdge(1, 2)
g.addEdge(2, 0)
g.addEdge(2, 3)
g.addEdge(3, 3)
print("Following is Depth First Traversal (starting from vertex 2)")
# Function call
g.DFS(2)
```

TRY

1. Write a program to implement breadth first search and depth first search by consider the below graph and verify the results.

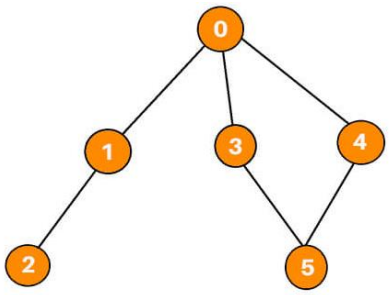

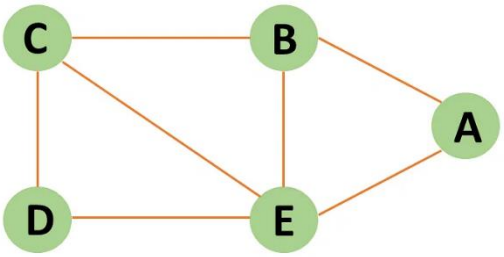

10. Minimum Spanning Tree (MST)

10.1 Kruskal's Algorithm

In Kruskal's algorithm, sort all edges of the given graph in increasing order. Then it keeps on adding new edges and nodes in the MST if the newly added edge does not form a cycle. It picks the minimum weighted edge at first and the maximum weighted edge at last.

MST using Kruskal's algorithm:

1. Sort all the edges in non-decreasing order of their weight.
2. Pick the smallest edge. Check if it forms a cycle with the spanning tree formed so far. If the cycle is not formed, include this edge. Else, discard it.
3. Repeat step#2 until there are (V-1) edges in the spanning tree.

Kruskal's algorithm to find the minimum cost spanning tree uses the greedy approach. The Greedy Choice is to pick the smallest weight edge that does not cause a cycle in the MST constructed so far.

Input: For the given graph G find the minimum cost spanning tree.

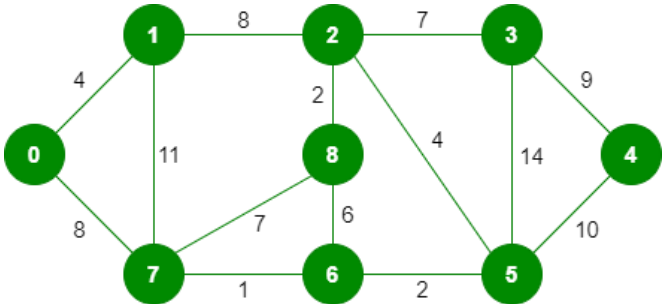

The graph contains 9 vertices and 14 edges. So, the minimum spanning tree formed will be having (9 – 1) = 8 edges.

After sorting:

Weight	Source	Destination
1	7	6
2	8	2
2	6	5
4	0	1
4	2	5
6	8	6
7	2	3
7	7	8
8	0	7
8	1	2
9	3	4
10	5	4
11	1	7
14	3	5

Now pick all edges one by one from the sorted list of edges.

Output:

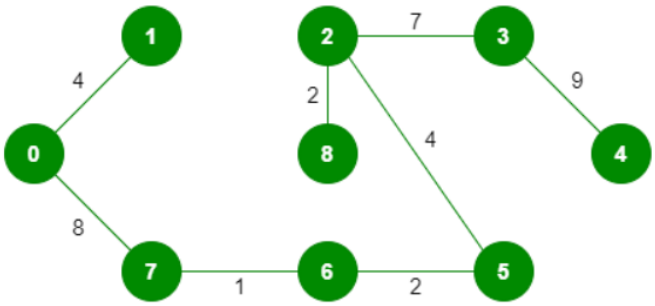

Hints:

```
# Kruskal's algorithm to find minimum Spanning Tree of a given connected,
# undirected and weighted graph

# Class to represent a graph
class Graph:
    def __init__(self, vertices):
        self.V = vertices
        self.graph = []

    # Function to add an edge to graph
    def addEdge(self, u, v, w):
        self.graph.append([u, v, w])

    def find(self, parent, i):
        …

    def union(self, parent, rank, x, y):
        …

    def KruskalMST(self):
            # write your code here
            …

# Driver code
g = Graph(4)
g.addEdge(0, 1, 10)
g.addEdge(0, 2, 6)
g.addEdge(0, 3, 5)
g.addEdge(1, 3, 15)
```

```
g.addEdge(2, 3, 4)

# Function call
g.KruskalMST()
```

Output: Following are the edges in the constructed MST
2 -- 3 == 4

0 -- 3 == 5

0 -- 1 == 10

Minimum Cost Spanning Tree: 19

10.2 Prim's Algorithm

The Prim's algorithm starts with an empty spanning tree. The idea is to maintain two sets of vertices. The first set contains the vertices already included in the MST, and the other set contains the vertices not yet included. At every step, it considers all the edges that connect the two sets and picks the minimum weight edge from these edges. After picking the edge, it moves the other endpoint of the edge to the set containing MST.

Prim's Algorithm:
The working of Prim's algorithm can be described by using the following steps:

1. Determine an arbitrary vertex as the starting vertex of the MST.
2. Follow steps 3 to 5 till there are vertices that are not included in the MST (known as fringe vertex).
3. Find edges connecting any tree vertex with the fringe vertices.
4. Find the minimum among these edges.
5. Add the chosen edge to the MST if it does not form any cycle.
6. Return the MST and exit

Input: For the given graph G find the minimum cost spanning tree.

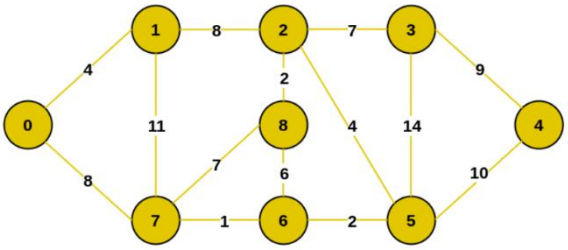

Output: The final structure of the MST is as follows and the weight of the edges of the MST is (4 + 8 + 1 + 2 + 4 + 2 + 7 + 9) = 37.

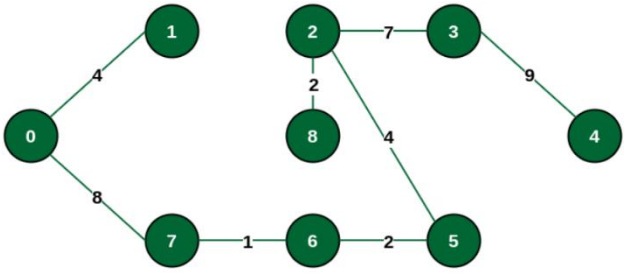

Hints:

```
# Prim's Minimum Spanning Tree (MST) algorithm.
# The program is for adjacency matrix representation of the graph
```

```
# Library for INT_MAX
import sys

class Graph():
    def __init__(self, vertices):
        self.V = vertices
        self.graph = [[0 for column in range(vertices)]
                      for row in range(vertices)]

    # A utility function to print
    # the constructed MST stored in parent[]
    def printMST(self, parent):
        print("Edge \tWeight")
        for i in range(1, self.V):
            print(parent[i], "-", i, "\t", self.graph[i][parent[i]])

    # A utility function to find the vertex with
    # minimum distance value, from the set of vertices
    # not yet included in shortest path tree
    def minKey(self, key, mstSet):

        …
    def primMST(self):
        …


# Driver's code
g = Graph(5)
g.graph = [[0, 2, 0, 6, 0],
           [2, 0, 3, 8, 5],
           [0, 3, 0, 0, 7],
           [6, 8, 0, 0, 9],
           [0, 5, 7, 9, 0]]

g.primMST()
```

Output:

Edge	Weight
0 - 1	2
1 - 2	3
0 - 3	6
1 - 4	5

TRY

1. Write a program to implement kruskal's algorithm and prim's algorithm by consider the below graph and verify the results.

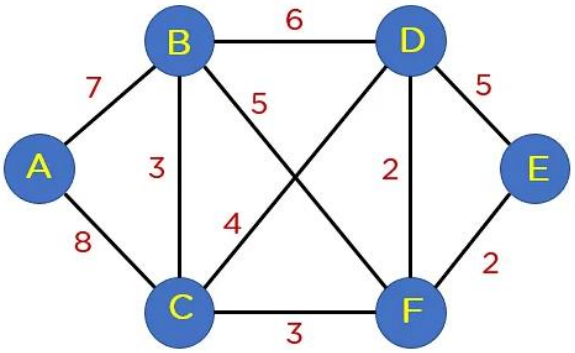

11. Roots of Equations

11.1 Bisection Method

The Bisection method is also called the interval halving method, the binary search method or the dichotomy method. This method is used to find root of an equation in a given interval that is value of 'x' for which f(x) = 0. The method is based on **The Intermediate Value Theorem** which states that if f(x) is a continuous function and there are two real numbers a and b such that f(a) * f(b) 0 and f(b) < 0), then it is guaranteed that it has at least one root between them.

Assumptions:

1. f(x) is a continuous function in interval [a, b]
2. f(a) * f(b) < 0

Steps:

1. Find middle point c= (a + b)/2.
2. If f(c) == 0, then c is the root of the solution.
3. Else f(c) != 0
   - If value f(a)*f(c) < 0 then root lies between a and c. So we recur for a and c
   - Else If f(b)*f(c) < 0 then root lies between b and c. So we recur b and c.
   - Else given function doesn't follow one of assumptions.

Since root may be a floating point number, we repeat above steps while difference between a and b is greater than and equal to a value? (A very small value).

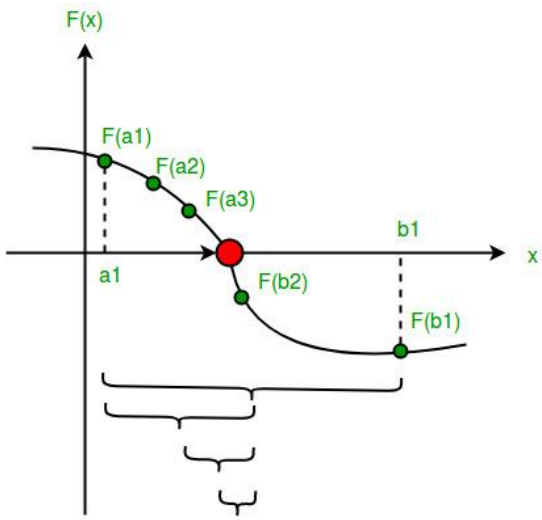

Hints:

```
# An example function whose solution is determined using Bisection Method.
# The function is x^3 - x^2  + 2
def func(x):
    return x*x*x - x*x + 2

# Prints root of func(x) with error of EPSILON
def bisection(a,b):
```

```
    # Write your code here
    …

# Driver code
# Initial values assumed
a =-200
b = 300
bisection (a, b)
```

Output: The value of root is : -1.0025

TRY

1. Take an input function x^2 - x^3 + 2 and verify the results.
2. Take an input function x^3 - x^3 + 4 and verify the results.

11.2 Method of False Position

Given a function f(x) on floating number x and two numbers 'a' and 'b' such that f(a)*f(b) < 0 and f(x) is continuous in [a, b]. Here f(x) represents algebraic or transcendental equation. Find root of function in interval [a, b] (Or find a value of x such that f(x) is 0).

Input: A function of x, for example x3 – x2 + 2.
And two values: a = -200 and b = 300 such that
f(a)*f(b) < 0, i.e., f(a) and f(b) have opposite signs.

Output: The value of root is : -1.00
OR any other value close to root.

Hints:

```
MAX_ITER = 1000000

# An example function whose solution is determined using Regular Falsi Method.
# The function is x^3 - x^2 + 2
def func( x ):
    return (x * x * x - x * x + 2)

# Prints root of func(x) in interval [a, b]
def regulaFalsi( a , b):
    # Write your code here
    …

# Driver code to test above function
# Initial values assumed
a =-200
b = 300
regulaFalsi(a, b)
```

TRY

1. Take an input function x^2 - x^3 + 2 and verify the results.
2. Take an input function x^3 - x^3 + 4 and verify the results.

11.3 Newton Raphson Method

Given a function f(x) on floating number x and an initial guess for root, find root of function in interval. Here f(x) represents algebraic or transcendental equation.

Input: A function of x (for example $x^3 – x^2 + 2$), derivative function of x ($3x^2 – 2x$ for above example) and an initial guess x0 = -20

Output: The value of root is: -1.00 or any other value close to root.

Algorithm:
Input: initial x, func(x), derivFunc(x)

Output: Root of Func()

1. Compute values of func(x) and derivFunc(x) for given initial x
2. Compute h: h = func(x) / derivFunc(x)
3. While h is greater than allowed error ε
   - h = func(x) / derivFunc(x)
   - x = x – h

Hints:

```
# Implementation of Newton Raphson Method for solving equations
# An example function whose solution is determined using Bisection Method.
# The function is x^3 - x^2 + 2
def func( x ):
    return x * x * x - x * x + 2

# Derivative of the above function which is 3*x^x - 2*x
def derivFunc( x ):
    return 3 * x * x - 2 * x

# Function to find the root
def newtonRaphson( x ):
    # Write your code here
    …

# Driver program
x0 = -20
newtonRaphson(x0)
```

TRY

1. Take an input function x^2 - x^3 + 2 and verify the results.
2. Take an input function x^3 - x^3 + 4 and verify the results.

11.4 Secant Method

The secant method is used to find the root of an equation f(x) = 0. It is started from two distinct estimates x1 and x2 for the root. It is an iterative procedure involving linear interpolation to a root. The iteration stops if the difference between two intermediate values is less than the convergence factor.

Input: Equation = x3 + x – 1
x1 = 0, x2 = 1, E = 0.0001

Output: Root of the given equation = 0.682326
No. of iteration=5

Algorithm

```
Initialize: x1, x2, E, n        // E = convergence indicator
calculate f(x1),f(x2)

if(f(x1) * f(x2) = E); //repeat the loop until the convergence
    print 'x0' //value of the root
    print 'n' //number of iteration
}
else
    print "cannot found a root in the given interval"
```

Hints:

```
# Find root of an equations using secant method
# Function takes value of x and returns f(x)
def f(x):
    # we are taking equation as x^3+x-1
    f = pow(x, 3) + x - 1;
    return f;
```

```
def secant(x1, x2, E):
   # Write your code here
    …

# Driver code
# initializing the values
x1 = 0;
x2 = 1;
E = 0.0001;
secant(x1, x2, E);
```

TRY

1. Take an input function x^2 - x + 2 and verify the results.
2. Take an input function x^3 - x^2 + 4 and verify the results.

11.5 Muller Method

Given a function f(x) on floating number x and three initial distinct guesses for root of the function, find the root of function. Here, f(x) can be an algebraic or transcendental function.

Input: A function f(x) = x + 2x + 10x - 20 and three initial guesses - 0, 1 and 2 .

Output: The value of the root is 1.3688 or any other value within permittable deviation from the root.

Input: A function f(x) = x - 5x + 2 and three initial guesses - 0, 1 and 2.

Output: The value of the root is 0.4021 or any other value within permittable deviation from the root.

Hints:

```
# Find root of a function, f(x)
import math;

MAX_ITERATIONS = 10000;

# Function to calculate f(x)
def f(x):
    # Taking f(x) = x ^ 3 + 2x ^ 2 + 10x - 20
    return (1 * pow(x, 3) + 2 * x * x +
                        10 * x - 20);

def Muller(a, b, c):
    # Write your code here
    …


# Driver Code
a = 0;
b = 1;
c = 2;
Muller(a, b, c);
```

TRY

1. Take an input function x^2 - x^3 + 2 and verify the results.
2. Take an input function x^3 - x^3 + 4 and verify the results.

12. Numerical Integration

12.1 Trapezoidal Rule for Approximate Value of Definite Integral

Trapezoidal rule is used to find the approximation of a definite integral. The basic idea in Trapezoidal rule is to assume the region under the graph of the given function to be a trapezoid and calculate its area.

$$\int_a^b f(x)\,dx \approx (b-a)\left[\frac{f(a)+f(b)}{2}\right]$$

Hints:

```
# Implement Trapezoidal rule

# A sample function whose definite integral's approximate value is
# computed using Trapezoidal rule
def y( x ):

    # Declaring the function
    # f(x) = 1/(1+x*x)
    return (1 / (1 + x * x))

# Function to evaluate the value of integral
def trapezoidal (a, b, n):
    # Write your code here
    …

# Driver code
# Range of definite integral
x0 = 0
xn = 1

# Number of grids. Higher value means more accuracy
n = 6
print ("Value of integral is ",
     "%.4f"%trapezoidal(x0, xn, n))
```

12.2 Simpson's 1/3 Rule

Simpson's 1/3 rule is a method for numerical approximation of definite integrals. Specifically, it is the following approximation:

$$\int_a^b f(x)dx \approx \frac{(b-a)}{6}\left(f(a)+4f\frac{(a+b)}{2}+f(b)\right)$$

Procedure:

In order to integrate any function f(x) in the interval (a, b), follow the steps given below:

1. Select a value for n, which is the number of parts the interval is divided into.
2. Calculate the width, h = (b-a)/n
3. Calculate the values of x0 to xn as x0 = a, x1 = x0 + h, …..xn-1 = xn-2 + h, xn = b.
   Consider y = f(x). Now find the values of y (y0 to yn) for the corresponding x (x0 to xn) values.
4. Substitute all the above found values in the Simpson's Rule Formula to calculate the integral value.

Approximate value of the integral can be given by **Simpson's Rule:**

$$\int_a^b f(x)dx \approx \frac{h}{3}\left(f_0+f_n+4*\sum_{i=1,3,5}^{n-1} f_i+2*\sum_{i=2,4,6}^{n-2} f_i\right)$$

Input: Evaluate logx dx within limit 4 to 5.2.

First we will divide interval into six equal parts as number of interval should be even.

x : 4 4.2 4.4 4.6 4.8 5.0 5.2

$\log_x$: 1.38 1.43 1.48 1.52 1.56 1.60 1.64

Output: Now we can calculate approximate value of integral using above formula:

= h/3[(1.38 + 1.64) + 4 * (1.43 + 1.52 + 1.60) +2 *(1.48 + 1.56)]

= 1.84

Hence the approximation of above integral is

1.827 using Simpson's 1/3 rule.

Hints:

```
# Simpson's 1 / 3 rule
import math

# Function to calculate f(x)
def func(x):
    return math.log(x)

# Function for approximate integral
def simpsons_(ll, ul, n):
    # Write your code here
     …

# Driver code
lower_limit = 4     # Lower limit
upper_limit = 5.2   # Upper limit
n = 6               # Number of interval
print("%.6f"% simpsons_(lower_limit, upper_limit, n))
```

12.3 Simpson's 3/8 Rule

The Simpson's 3/8 rule was developed by Thomas Simpson. This method is used for performing numerical integrations. This method is generally used for numerical approximation of definite integrals. Here, parabolas are used to approximate each part of curve.

Input: lower_limit = 1, upper_limit = 10, interval_limit = 10

Output: integration_result = 0.687927

Input: lower_limit = 1, upper_limit = 5, interval_limit = 3

Output: integration_result = 0.605835

Hints:

```
# Implement Simpson's 3/8 rule

# Given function to be integrated
def func(x):
    return (float(1) / ( 1 + x * x ))

# Function to perform calculations
def calculate(lower_limit, upper_limit, interval_limit ):
     # Write your code here
     …



# driver function
interval_limit = 10
lower_limit = 1
upper_limit = 10

integral_res = calculate(lower_limit, upper_limit, interval_limit)
```

```
# rounding the final answer to 6 decimal places
print (round(integral_res, 6))
```

13. Ordinary Differential Equations

13.1 The Euler Method

Given a differential equation dy/dx = f(x, y) with initial condition y(x0) = y0. Find its approximate solution using Euler method.

Euler Method:
In mathematics and computational science, the Euler method (also called forward Euler method) is a first-order numerical procedure for solving ordinary differential equations (ODEs) with a given initial value.

Consider a differential equation dy/dx = f(x, y) with initial condition y(x0) = y0
then a successive approximation of this equation can be given by:

y(n+1) = y(n) + h * f(x(n), y(n))
where h = (x(n) – x(0)) / n, h indicates step size. Choosing smaller values of h leads to more accurate results and more computation time.

Example:
Consider below differential equation dy/dx = (x + y + xy) with initial condition y(0) = 1 and step size h = 0.025. Find y(0.1).

Solution:
f(x, y) = (x + y + xy)
x0 = 0, y0 = 1, h = 0.025
Now we can calculate y1 using Euler formula
y1 = y0 + h * f(x0, y0)
y1 = 1 + 0.025 *(0 + 1 + 0 * 1)
y1 = 1.025
y(0.025) = 1.025.
Similarly we can calculate y(0.050), y(0.075), ...y(0.1).
y(0.1) = 1.11167

Hints:

```
# Find approximation of an ordinary differential equation using Euler method.

# Consider a differential equation
# dy / dx =(x + y + xy)
def func( x, y ):
    return (x + y + x * y)

# Function for Euler formula
def euler( x0, y, h, x ):
    # write code here
    …

# Driver Code
# Initial Values
x0 = 0
y0 = 1
h = 0.025

# Value of x at which we need approximation
x = 0.1
euler(x0, y0, h, x)
```

13.2 Runge-Kutta Second Order Method

Given the following inputs:

1. An ordinary differential equation that defines the value of **dy/dx** in the form **x** and **y**.
$\frac{dy}{dx} = f(x, y)$
2. Initial value of y, i.e., **y(0)**.
$y(0) = y_o$

The task is to find the value of unknown function y at a given point x, i.e. **y(x)**.
Input: x0 = 0, y0 = 1, x = 2, h = 0.2

Output: y(x) = 0.645590

Input: x0 = 2, y0 = 1, x = 4, h = 0.4;

Output: y(x) = 4.122991

Approach:
The Runge-Kutta method finds an approximate value of y for a given x. Only first-order ordinary differential equations can be solved by using the Runge-Kutta 2nd-order method.
Below is the formula used to compute the next value yn+1 from the previous value yn. Therefore:
y_{n+1} = value of y at (x = n + 1)
y_n = value of y at (x = n)
where 0 ? n ? $(x - x_0)/h$, h is step height
$x_{n+1} = x_0 + h$
The essential formula to compute the value of y(n+1):

K1 = h * f(x, y)

K2 = h * f(x/2, y/2) or K1/2

$y_{n+1} = y_n + K^2 + (h^3)$

The formula basically computes the next value $\mathbf{y_{n+1}}$ using current $\mathbf{y_n}$ plus the weighted average of two increments:
- **K1** is the increment based on the slope at the beginning of the interval, using y.
- **K2** is the increment based on the slope at the midpoint of the interval, using **(y + h*K1/2)**.

Hints:

```
# Implement Runge-Kutta method

# A sample differential equation
# "dy/dx = (x - y)/2"

def dydx(x, y):
    return (x + y - 2)

# Finds value of y for a given x using step size h and initial value y0 at x0.
def rungeKutta(x0, y0, x, h):
    # write code here
    …

# Driver Code
x0 = 0
y = 1
x = 2
h = 0.2
print("y(x) =", rungeKutta(x0, y, x, h))
```

14. Final Notes

The only way to learn programming is program, program and program on challenging problems. The problems in this tutorial are certainly NOT challenging. There are tens of thousands of challenging problems available – used in training for various programming contests (such as International Collegiate Programming Contest (ICPC), International Olympiad in Informatics (IOI)). Check out these sites:

- The ACM - ICPC International collegiate programming contest (https://icpc.global/)
- The Topcoder Open (TCO) annual programming and design contest (https://www.topcoder.com/)
- Universidad de Valladolid's online judge (https://uva.onlinejudge.org/).

- Peking University's online judge (http://poj.org/).
- USA Computing Olympiad (USACO) Training Program @ http://train.usaco.org/usacogate.
- Google's coding competitions (https://codingcompetitions.withgoogle.com/codejam, https://codingcompetitions.withgoogle.com/hashcode)
- The ICFP programming contest (https://www.icfpconference.org/)
- BME International 24-hours programming contest (https://www.challenge24.org/)
- The International Obfuscated C Code Contest (https://www0.us.ioccc.org/main.html)
- Internet Problem Solving Contest (https://ipsc.ksp.sk/)
- Microsoft Imagine Cup (https://imaginecup.microsoft.com/en-us)
- Hewlett Packard Enterprise (HPE) Codewars (https://hpecodewars.org/)
- OpenChallenge (https://www.openchallenge.org/)

Coding Contests Scores

Students must solve problems and attain scores in the following coding contests:

Name of the contest	Minimum number of problems to solve	Required score
• CodeChef	20	200
• Leetcode	20	200
• GeeksforGeeks	20	200
• SPOJ	5	50
• InterviewBit	10	1000
• Hackerrank	25	250
• Codeforces	10	100
• BuildIT	50	500
	Total score need to obtain	2500

Student must have any one of the following certification:

1. HackerRank - Problem Solving Skills Certification (Basic and Intermediate)
2. GeeksforGeeks – Data Structures and Algorithms Certification
3. CodeChef - Learn Python Certification
4. Interviewbit – DSA pro / Python pro
5. NPTEL – Programming, Data Structures and Algorithms
6. NPTEL – The Joy of Computing using Python

V. TEXT BOOKS:

1. Eric Matthes, "Python Crash Course: A Hands-On, Project-based Introduction to Programming", No Starch Press, 3rd Edition, 2023.
2. John M Zelle, "Python Programming: An Introduction to Computer Science", Ingram short title, 3rd Edition, 2016.

VI. REFERENCE BOOKS:

1. Yashavant Kanetkar, Aditya Kanetkar, "Let Us Python", BPB Publications, 2nd Edition, 2019.
2. Martin C. Brown, "Python: The Complete Reference", Mc. Graw Hill, Indian Edition, 2018.
3. Paul Barry, "Head First Python: A Brain-Friendly Guide", O'Reilly, 2nd Edition, 2016
4. Taneja Sheetal, Kumar Naveen, "Python Programming – A Modular Approach", Pearson, 1st Edition, 2017.
5. R Nageswar Rao, "Core Python Programming", Dreamtech Press, 2018.

VII. ELECTRONICS RESOURCES

8. https://realPython.com/Python3-object-oriented-programming/
9. https://Python.swaroopch.com/oop.html
10. https://Python-textbok.readthedocs.io/en/1.0/Object_Oriented_Programming.html
11. https://www.programiz.com/Python-programming/
12. https://www.geeksforgeeks.org/python-programming-language/

VIII. MATERIALS ONLINE

1. Course template
2. Lab Manual

COURSE CONTENT

MANUFACTURING PRACTICE								
I Semester: CSE (AI & ML) / IT / ECE / EEE **II Semester:** CSE / CSE (DS) / CSE (CS)								
Course Code	**Category**	**Hours / Week**			**Credits**	**Maximum Marks**		
AMED02	**Foundation**	**L**	**T**	**P**	**C**	**CIA**	**SEE**	**Total**
		-	1	2	2	40	60	100
Contact Classes: Nil	**Tutorial Classes: 15**	**Practical Classes:30**				**Total Classes:45**		
Prerequisite: There is no prerequisite for this course.								

I. COURSE OVERVIEW:

This course provides the opportunity to become confident with new tools, equipment, and techniques for creating physical objects and mechanisms with a variety of materials. The students will learn the concepts of 3D printing, laser cutting, circuit board soldering, wood carving and CNC machining. Skills learned in the course enable the students about the design process in digital manufacturing used in various industrial applications.

II. COURSES OBJECTIVES:

The students will try to learn

I. The digital and additive manufacturing techniques used in various industrial applications in the current era to develop prototype models.
II. The unconventional machining processes and their selective applications as an alternative to traditional manufacturing methods.
III. The standard electrical wiring practices for domestic and industrial appliances.
IV. The soldering and de-soldering components on a circuit board safely and correctly.

III. COURSE OUTCOMES:

At the end of the course students should be able to:

CO 1 Practice the various types of manufacturing methods for preparing the given material to desired shape by using traditional and unconventional manufacturing practices.

CO 2 Execute the additive manufacturing technology for learning about the 3D printing processes and techniques.

CO 3 Select computer numerical control laser techniques for preparing the required geometrical profiles on non-metallic materials.

CO 4 Demonstrate the assembly and disassembly of electrical equipment's and controls for safe domestic applications.

CO 5 Make use of computer numerical technologies to create products using wood carving techniques.

CO 6 Apply the plumbing skills to work with fittings and pipes made of PVC and galvanized steel.

IV. COURSE CONTENT:

EXERCISES ON MANUFACTURING PRACTICES

Note: Students are encouraged to bring their own laptops for laboratory practice sessions.

All dimensions are in mm in experiments.

Safety

Safety is a vital issue in all workplaces. Before using any equipment and machines or attempt practical work in a workshop everyone must understand basic safety rules. These rules will help keep all safe in the workshop.

Safety Rules

1. Always listen carefully to the teacher and follow instructions.
2. When learning how to use a machine, listen very carefully to all the instructions given by the faculty / instructor. Ask questions, especially if you do not fully understand.
3. Always wear an apron as it will protect your clothes and holds lose clothing such as ties in place.
4. Wear good strong shoes.
5. Bags should not be brought into a workshop as people can trip over them.
6. Do not use a machine if you have not been shown how to operate it safely by the faculty / instructors
7. Know where the emergency stop buttons are positioned in the workshop. If you see an accident at the other side of the workshop you can use the emergency stop button to turn off all electrical power to machines.
8. Wherever required, wear protective equipment, such as goggles, safety glasses, masks, gloves, hair nets, etc.
9. Always be patient, never rush in the workshop.
10. Always use a guard when working on a machine.
11. Keep hands away from moving/rotating machinery.
12. Use hand tools carefully, keeping both hands behind the cutting edge.
13. Report any UNSAFE condition or acts to instructor.
14. Report any damage to machines/equipment as this could cause an accident.
15. Keep your work area clean.

1. Getting Started Exercises

1.1 Principles of 3D printing and additive manufacturing techniques

3D printing or additive manufacturing enables to produce geometrically complex objects, shapes and textures. It often uses less material than traditional manufacturing methods and allows the production of prototypes / products that are not possible to produce economically with conventional manufacturing.

i) Familiarization of 3D printing machine and its principle of operation.
ii) Standard use of Computer Aided Design (CAD) drawings .dwg format and Interface with CURA / Simplify 3D software as .stl file.
iii) Selection of Polylactic Acid (PLA) and Acrylonitrile Butadiene Styrene (ABS) materials and their specifications.

1.2 Preparation of stepped pulley with PLA material as shown in Figure 1.1

- Slicing of stepped pulley using. stl format
- Laying of stepped pulley using 3D printing

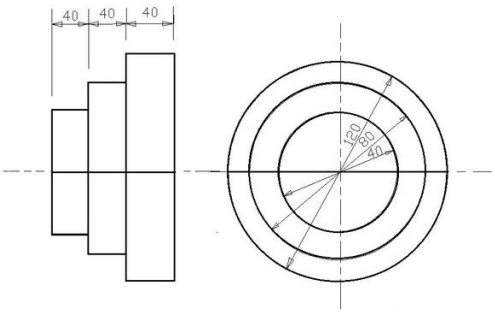

Figure 1.1 Stepped pulley

Try

1. Preparation of spur gear with ABS material as shown in the Figure 1.2
   - Slicing of spur gear using .stl format
   - Laying of spur gear using 3D printing.

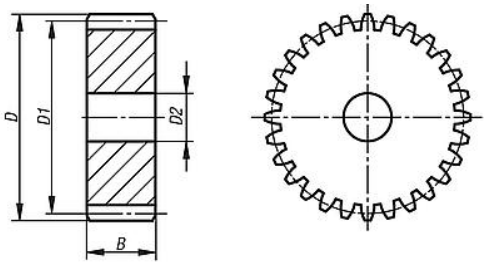

Figure 1.2 Spur gear

Dimensions:

D = 40mm

D1 = 44mm Module, m= 2mm

D2= 20mm B= 10mm

Hint: Set the appropriate nozzle and temperature for ABS material, compare with PLA material.

2. Introduction to computerized numerical control (CNC) laser engraving

CNC Engraving machine is the process of gradually removing a small amount of material from a surface along a defined path. The process leaves a visible marking on the surface of the substrate (workpiece) with high accuracy and precision control.

i) Familiarization of CNC engraving machine with action control.

ii) Create a visualization of the engraving pattern on CAD software. The student must have a solid grip on CAD to be able to create complex patterns in a quick and accurate manner.

iii) Computer Aided Manufacturing (CAM) software is a special software that is used to generate programs for the CNC engraving machine.

2.1 Preparation of acrylic gears using CNC laser engraving / cutting machine as shown in Figure 2.1

i) The parts file is divided into two pages. The file is a pdf. As different laser cutters use different file formats I leave it to you to convert it to a format suitable for your machine.
ii) All the parts apart for the dowel pieces cut out and ready to go. The blue piece is the clear acrylic front with its protective film still attached. Having cut out all the parts follow the instructions below to assemble the gear display.
iii) Glue together the two eighteen teeth gears. Make sure that they are aligned precisely.

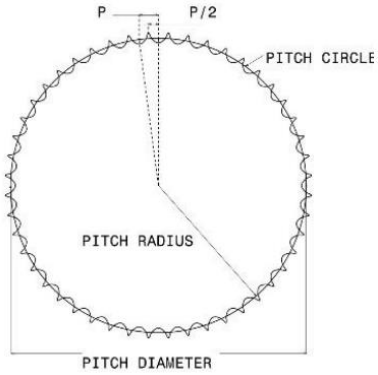

Figure 2.1 Acrylic gear

Try

1. Preparation of artistic components IARE logo using CNC laser engraving as shown in the Figure 2.2

- Open your program and create new file (OPEN-NEW FILE), use the TEXT tool and write the word you want to engrave.
- Shows how to transform this word into an objects, each letter will become an individual shape.
- When using the laser technology, you have to make sure the file is one whole object, not a group of objects.

Figure 2.2 IARE logo

Hint: Set the appropriate parameters to perform operation on the balsaw wood material.

3. Introduction to computerized numerical control wood carving machines

CNC wood carving is the process of gradually removing a small amount of material from a surface along a defined path. The process leaves a visible marking on the surface of the substrate (workpiece) with high accuracy and precision control.

i) Familiarization of CNC machine with action control.
ii) Create a visualization of the engraving pattern on CAD software. The student must have a solid grip on CAD to be able to create complex patterns in a quick and accurate manner.
iii) Computer Aided Manufacturing (CAM) software is a special software that is used to generate programs for the CNC engraving machine.

3.1 Preparation of wooden wheel using computerized wood carving machine as shown in the Figure 3.1

- Preparation of CAD .dwg file
- Importing the file into wood carving machine for generating the profile using CAM software.

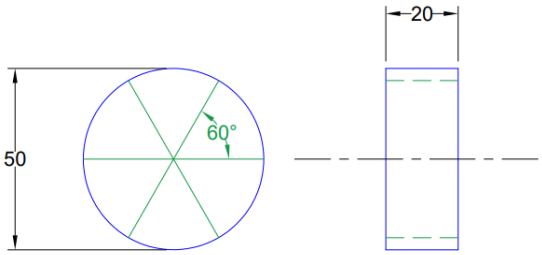

Figure 3.1 Wooden wheel

Try

1. Preparation of IARE lettering using CNC wood carving as shown in the Figure 3.2.

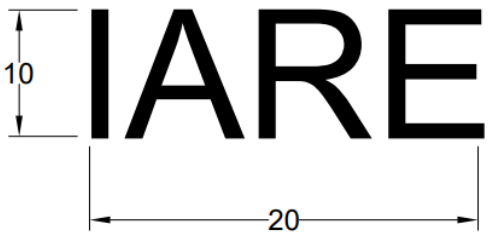

Figure 3.2 IARE lettering

Hint: Set the appropriate parameters to perform operation on the medium density fibreboard (MDF) wood material.

4. Introduction to pipe fitting and threading

Threaded fittings are used in non-critical applications and when service fluid is at ambient temperatures such was instrument air, plant air, cooling water, potable water etc. As they do not require welding, they are used at places where welding is not permitted.

i) Preparation of Polyvinyl Chloride (PVC) material for pipe fitting

ii) Making threads on PVC pipe using thread die sets

iii) Fitting the threaded PVC pipe for T-shape using Tee joint

4.1 Preparation of PVC material for pipe threading and fitting as shown in the figure 4.1

i) Start by cutting the two pipes to the required length, making sure that they are the same size and the ends line up properly.

ii) Make the threads using die sets to one end of the pipes, then place it on top of the pipe where you want to join.

iii) Then start rotating to get bonded together.

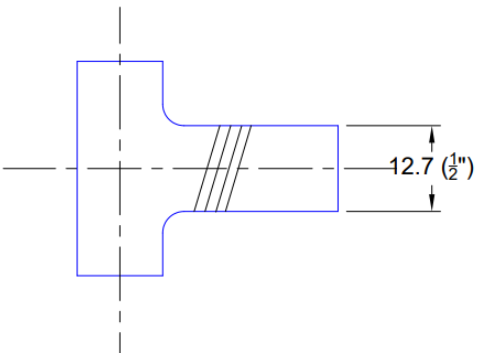

Figure 4.1 T Joint

Try

1. Preparation of galvanized steel I joint as shown in the Figure 4.2.

i) Start by cutting the two pipes to the required length, making sure that they are the same size and the ends line up properly.
ii) Make the threads using die sets to one end of the pipes, then place it on top of the pipe where you want to join.
iii) Then start rotating to get bonded together.

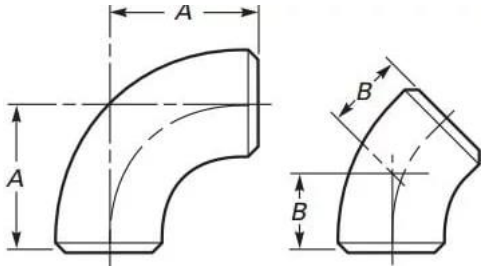

Figure 4.2. GI Elbow Joint

Dimensions:
A = 40mm
B = 30mm

Hint: Set the appropriate die sets in order to get perfect threading in pipe fittings.

5. Introduction to computer numerical control (CNC) lathe machines

A lathe is a machine tool that rotates a workpiece about an axis of rotation to perform various operations such as cutting, sanding, knurling, drilling, deformation, facing, and turning, with tools that are applied to the workpiece to create an object with symmetry about that axis.

i) Operate with Computer Numerical Control (CNC) systems and provided with precise design instructions.
ii) CNC Lathes are machine tools where the material or part is clamped and rotated by the main spindle, while the cutting tool that work on the material, is mounted and moved in various axis.

5.1 Preparation of Mild Steel (MS) material for step turning with grooving operation as shown in the Figure 5.1

- Inspect the mild steel raw material using Vernier calipers. The work piece is held in the chuck by placing it properly and tightening it using the chuck key.
- Now single point cutting tool is placed in the tool post and properly arranged to the centre of the work piece.
- Work piece is rotated by switching on the motor.
- Perform the facing operations on both sides and maintain the given dimensions.
- First the plain turning operation is carried out by placing the tool at 1 mm feed to the lathe axis.
- After that step turning operation is performed till the desired diameter is obtained.

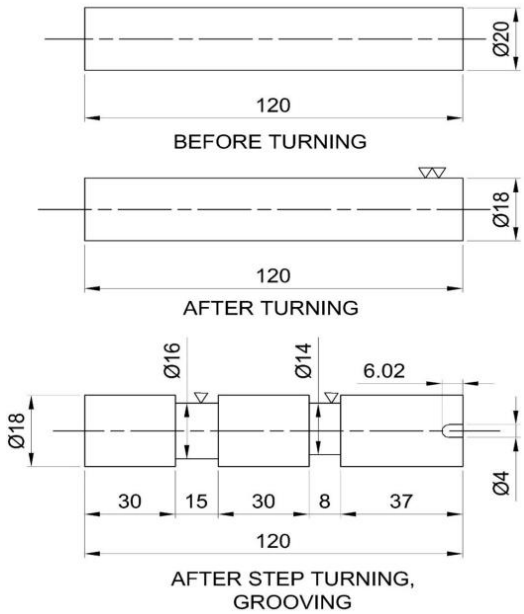

Figure 5.1. Step turning with grooving operation

Try

1. Preparation of Mild Steel (MS) material for step turning with tapper operation as shown in the Figure 5.2.
   - Select a tool bit to the desired size and shape of the groove required.
   - Lay out the location of the groove.
   - Set the lathe to half the speed for turning.
   - Mount the workpiece in the lathe and set the tool bit to centre height.

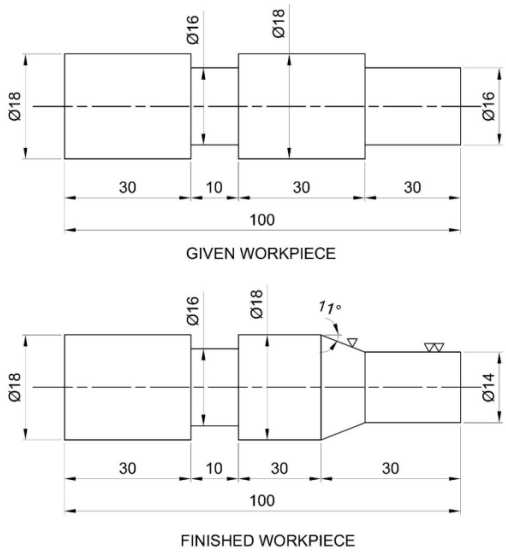

Figure 5.2. Step turning with tapper operation

6. Introduction to conventional lathe machines

The conventional lathe machine is a standard lathe that is used for holding and turning various types of materials such as metal, wood, plastic etc. against a cutting tool in order to produce a cylindrical object. Besides this it can even perform many other functions like grinding, boring, threading, polishing, reaming, drilling etc.

i) Operate with conventional lathe provides with manual design instructions.
ii) Lathes are machine tools where the material or part is clamped and rotated by the main spindle, while the cutting tool that work on the material, is mounted and moved in various axis.

6.1 Preparation of mild steel (MS) material for thread cutting and knurling operation as shown in the Figure 6.1

- Fix the job on the machine by using chuck key. Turn the job to the required diameter by fixing the single point cutting tool.
- Chamfer the edge and make an under cut at the other end.
- Engage the bed screw and perform the threading operation.
- Stop when the pitch is measured by the pitch gauge.
- Reverse the job and hold it carefully so that the threads are not damaged. Disengage the back gear and lead screw
- Hold the knurling tool against the rotating job.

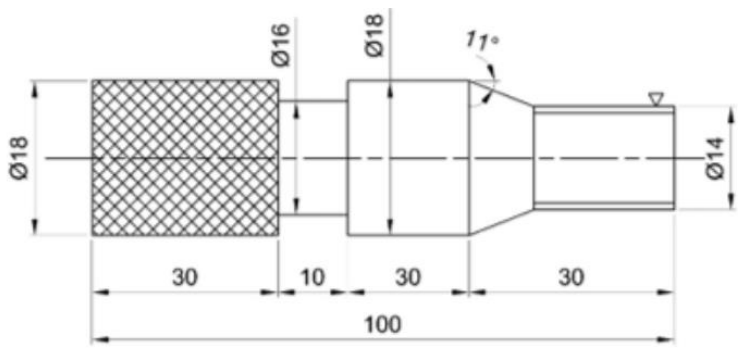

Figure 6.1. Thread cutting and knurling operation

Try

1. Preparation of aluminum material for step turning with tapper operation as shown in the Figure 6.2.
   - Select a tool bit to the desired size and shape of the groove required.
   - Lay out the location of the groove.
   - Set the lathe to half the speed for turning.
   - Mount the workpiece in the lathe and set the tool bit to centre height.

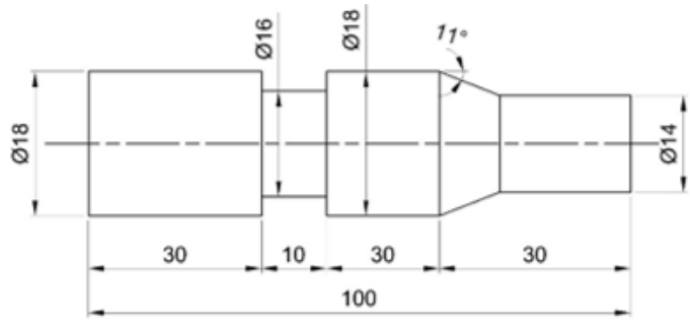

Figure 6.2. Step turning with tapper operation

7. Introduction to milling machines

Milling is the process of machining using rotary cutters to remove material by advancing a cutter into a workpiece. This may be done by varying directions on one or several axes, cutter head speed, and pressure. Milling covers a wide variety of different operations and machines, on scales from small individual parts to large, heavy-duty gang milling operations. It is one of the most used processes for machining custom parts to precise tolerances.

i) Milling machine employed in the metal removing operation in which the work is rigidly clamped on the table of the machine and the revolving cutter which has multiple teeth is mounted on the arbor.

ii) The cutter revolves at high speed and the work is fed slowly past the cutter.

iii) The work can be fed in a vertical, longitudinal, or cross direction depending upon the type of milling machine being used.

iv) As the work proceeds, the cutter-teeth removes the metal from the surface of the job(workpiece) to produce the desired shape.

7.1 Preparation of slotting operation as shown in Figure 7.1

- Keep the work piece on the working table in req. position with the help of holding device.
- Keep the cutting tool in the spindle and move the working table upward to give touch the surface of the work piece.
- Then give the power supply and move the work table forward and backward with the help of lever.
- Repeat the same procedure by changing the feed rate in upward and cross direction to get the req. dimension of slot on the work piece.

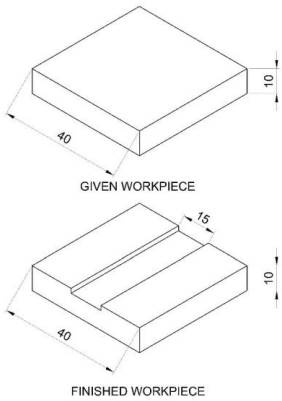

Figure 7.1 Slotting operation

Try

1. Perform the boring and reaming operation on a rectangular work piece to obtain the required dimensions using vertical milling machine as shown in Figure 7.2.

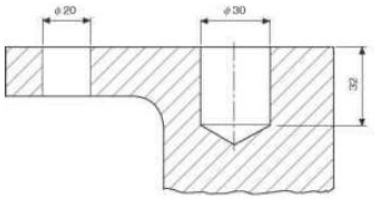

Figure 7.2. Boring and reaming operation

8. Introduction to shaping machines

A shaping machine is a mechanical device used to shape and form metal workpieces. It operates by removing material through a reciprocating cutting motion, resulting in the desired shape or contour. Shaping machines are commonly used in metalworking industries for various applications, including creating flat surfaces, slots, and grooves.

i) A rigid table on the machine supports the workpiece. Over the workpiece, the ram moves back and forth as shown in the animation above. A vertical tool slide is adjusted to either side of the vertical plane along the stroke axis, which is located at the front of the ram.

ii) The geometry of the linkage causes the ram to travel more quickly on the return stroke than the forward stroke (cutting stroke). As the shaper works on the quick return mechanism, the sliding action of the slider is aided by the rotating link.

iii) One of the four mechanisms i.e. crank and slotted, whitworth quick return, hydraulic, and automatic table feed mechanism, is responsible for the quick return mechanism and reciprocating movement of the ram. The automatic table feed is commonly used today which employs a pawl and ratchet mechanism in a shaping machine.

8.1 Preparation of V-groove operation as shown in Figure 8.1

- The job is fixed on a vice and the tool is fixed on tool post.
- The stroke of ram is adjusted to required length and machine is switched on.
- Always during machining, the job should be properly fixed with the half of try Square and vice to get a right-angle surface after machining.
- After completion of work, the job should be filled help of file before fixing the job, V block dimensions are marked on the job with the help of dot punch.
- The tool head should be rotated at 450 to make the V- groove.
- The feed is given such that the tool moves gradually on either side of the middle line.

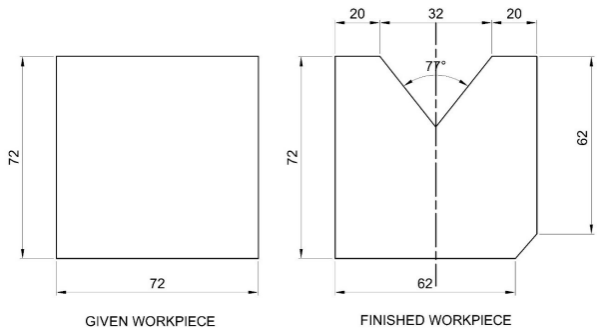

Figure 8.1 V-groove operation

Try

1. Perform the key ways on a cylindrical work piece to obtain the required dimensions using shaping machine as shown in Figure 8.2

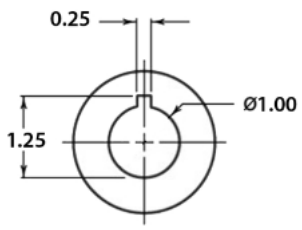

Figure 8.2 Key ways on a cylindrical work piece

9. Introduction to electrical wiring practices for domestic appliances

The Electrical Wiring Systems are mostly standardized with several rules, regulations, and laws. Electrical Wiring must be installed correctly and safely in accordance with electrical regulations and standards. If the electrical wiring is carried out incorrectly or without confirming to any standard, then it may lead to incidents like short circuits, electric shocks, damage the device / appliance or leads to the malfunctioning of device which further causes for the reduction of device life.

i) Before starting any installation work, the first and foremost thing is the concern of safety of the personnel. Electricity is dangerous and direct or indirect contact of electrical equipment or wires with the power turned ON can result in serious injuries or sometimes even causes death. Follow the below steps to maintain the safety at the workplace.

ii) Several factors must be considered before the actual installation work to be done for residential, commercial, or industrial wiring. These factors include type of building construction, type of ceiling, wall, and floor construction, wiring methods, installation requirements, etc.

9.1 Preparation of wiring for a stair case arrangement using a two-way switch as shown in Figure 9.1

- Mark switch and bulb location points and draw lines for wiring on the wooden Board.
- Place wires along the lines and fix them with the help of clips.
- Fix the two-way switches and bulb holder in the marked position on the wooden Board.
- Complete the wiring as per the wiring diagram.
- Test the working of the bulbs by giving electric supply to the circuit

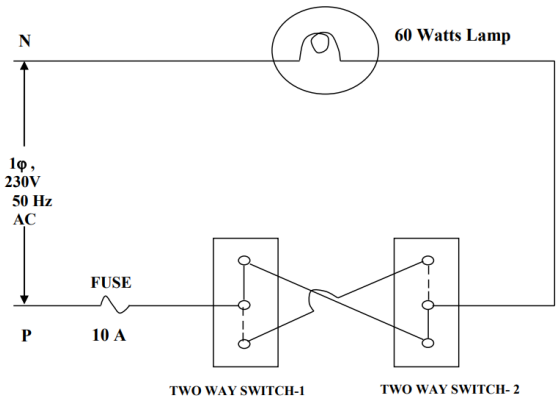

Figure 9.1 Circuit diagram-staircase wiring

Try

1. Prepare wiring for a tube light with switch control as shown in Figure 9.2.
   - Mark the switch and tube light location points and draw lines for wiring on the wooden board.
   - Place wires along the lines and fix them with the help of clips.
   - Fix the switch and tube light fitting in the marked positions.
   - Complete the wiring as per the wiring diagram.
   - Test the working of the tube light by giving electric supply to the Circuit.

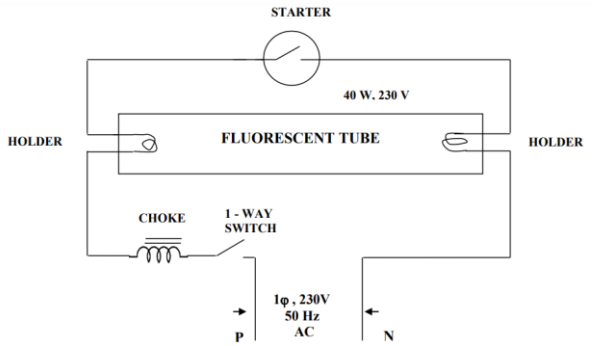

Figure 9.2 Circuit diagram-tube light

10. Introduction to soldering and desoldering practice

Soldering is defined as "the joining of metals by a fusion of alloys, which have relatively low melting points". In other words, you use a metal that has a low melting point to adhere the surfaces to be soldered together. Soldering is more like gluing with molten metal than anything else. Soldering is also a must have skill for all sorts of electrical and electronics work. It is also a skill that can only be developed with practice.

i) Soldering requires two main things: a soldering iron and solder. Soldering irons are the heat source used to melt solder. Irons of the 15W to 30W range are good for most electronics/printed circuit board work.
ii) Using anything higher in wattage and you risk damaging either the component or the board. Note that you should not use so-called soldering guns. These are very high wattage and generate most of their heat by passing an electrical current through a wire. Because of this, the wire carries a stray voltage that could damage circuits and components. The choice of solder is also important.
iii) One of the things to remember is to never use acid core solder. Acid core solder will corrode component leads, board traces and form conductive paths between components.

10.1 Preparation of soldering from a circuit board as shown in Figure 10.1

- All parts must be clean and free from dirt and grease.
- Try to secure the work firmly.
- "Tin" the iron tip with a small amount of solder. Do this immediately, with new tips being used for the first time.
- Clean the tip of the hot soldering iron on a damp sponge.
- Many people then add a tiny amount of fresh solder to the cleansed tip.
- Heat all parts of the joint with the iron for under a second or so.
- Continue heating, then apply sufficient solder only, to form an adequate joint.
- Remove and return the iron safely to its stand.
- It only takes two or three seconds at most, to solder the average printed circuit board (PCB). joint.
- Do not move parts until the solder has cooled.

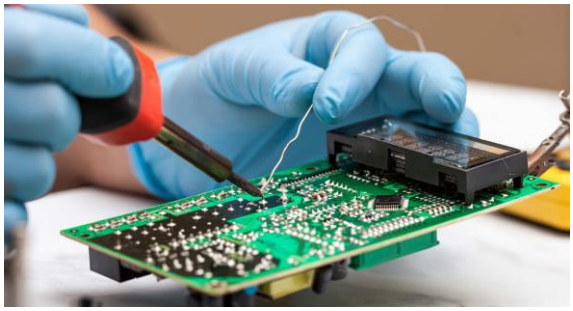

Figure 10.1 Soldering operation

Try

1. Perform desoldering operation from a circuit board as shown in Figure 10.2.
   - Heat up the solder with the iron.
   - Slide the iron up the pins to bring most of the solder away from the joint.

- Using pliers, gently pull at the components to remove their pins from the pin holes while they are still hot. It's a good idea to pull by their leads as opposed to on the components themselves to maintain the quality of the component.

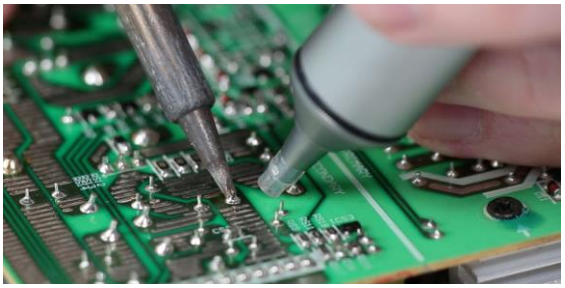

Figure 10.2 De-Soldering operation

11. Introduction to troubleshooting the ceiling fan and mixer grinder

In generally most ceiling fan and table fan have a capacitor start permanent capacitor motors which a difference from usual motor that it central position (Rotor/ Armature) remains fixed, while the outer portion rotates blades are mounted on the outer shaft when the motor is energized the blade cause to rotate and to circulate the surroundings are depends on the speed of fan. A regulator is connected in series with fan at different tapings hence the speed of the fan consist of a number of parts are connected together as a shaft to avoid loose fittings the parts are located bolts, split, pins and bearing lock.

i) Usually, a ceiling fan and table fan consist of a capacitor start and run motor. Capacitor are always connected in the circuit the advantages of leaving the capacitor permanently in circuit.

ii) It has one starting winding in series with one capacitor and running winding since the capacitor remains in the circuit permanently. This motor is often referred to as permanent. Split capacitor runs motor and behaves practically like an unbalanced 2phase motor.

11.1 Perform the maintenance of ceiling fan and ending the trouble shoot problems as shown in Figure 11.1

- The rapid spinning and vibrations your fan's components are subjected to can cause them to work loose and wear out. Inspecting the fan every two or three months you use it helps keep the fan working efficiently and extends its lifespan.
- One of the most common problems is a loose mount, which can cause your fan to wobble. A wobbling fan is unlikely to fall, but it can cause the light fixture to fall, so it's not something to ignore.
- Blades that are misaligned or out of balance can also cause wobbling. Over time, one or more blades can become warped, bent or otherwise damaged. Even a minor difference can disrupt the fan's normal performance, so check each blade closely.

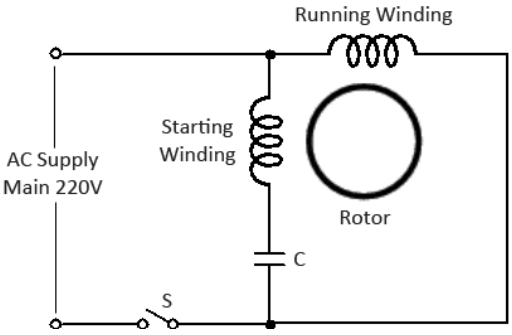

Figure 11.1 Celling fan circuit diagram

Try;

1. Perform the maintenance for mixer grinder from a circuit board as shown in Figure 11.2.
   - Universal Series Motor
   - Three Position Speed Control Rotary Switch
   - Thermal Overload Relay or overload switch

- Indicator Light
- Power Switch

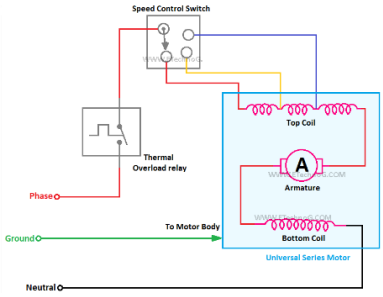

Figure 11.2. Mixer grinder circuit diagram

12. Introduction to 6 axis articulated robotic arm

ARISTO is six axis articulated robotic arm of industrial for training and research and is manufactured to industrial standards. The robot is capable of lifting up to 2.5kg of pay load. The robot can be used with pneumatic or electrical grippers. ARISTO has simulation software that allows the user to learn robot functions, application & programming.

- The evolution of the performance of robots and programming software provides new machining solutions. For complex parts, six axes robots offer more accessibility than a machining center CNC 5 axis and allow the integration of additional axes to extend the workspace.
- Robots have seen in recent years an expansion of their field of use with new requirements related to the increasing use of composites. The robots are then considered for machining operations (polishing, cutting, drilling etc.) that require high performance in terms of position, orientation, followed by trajectory precision and stiffness.

12.1 Preparation of articulated robot for lifting load as shown in Figure 12.1

- A load lifting robot is a type of industrial robot that is used for handling and placing products on a production line.
- They are typically used in high-volume manufacturing settings, where they can quickly and accurately place products onto conveyor belts or other production equipment

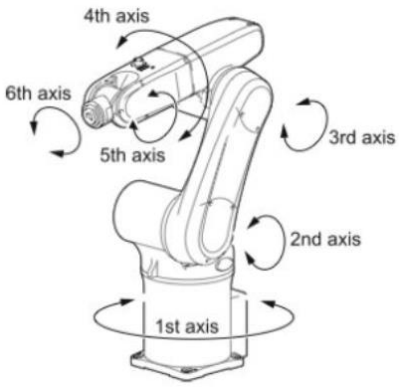

Figure 12.1 Six Axis Aristo Robot

Try

1. Perform the pick and place operation for the articulated robot as shown in Figure 12.2
   - A pick-and-place robot is a type of industrial robot that is used for handling and placing products on a production line.
   - They are typically used in high-volume manufacturing settings, where they can quickly and accurately place products onto conveyor belts or other production equipment.

Figure 12.2. Pick and place operation

13. Introduction to FANUC simulator

The FANUC CNC Simulator brings the world's most popular control right into your workplace training room, providing hands-on training for FANUC CNC operation without the need for a full machine. Add Machining Simulation Software to the CNC Simulator for advanced machine simulation capability.

- This PC-based platform is perfect for training and designing part programming. The CNC Machining Simulation software provides a digital twin of the machine tool producing the real-world cutting process. This provides you with the most realistic simulation of the actual machining on your floor. To prepare the industry for more complex machining knowhow, a 5-axis machining training option is now available.
- For companies needing a more tailored training offering, FANUC America's CNC Hardware Simulators are fully functional CNCs that include the panel and operating system. More robust than our CNC Simulators, our CNC Hardware Simulators are complete control simulators customized to address your specific workplace training needs. Operations needing a particular CNC model for their shopfloor training will benefit from these simulators.

13.1 Preparation of milling and lathe system switchable on one simulator as shown in Figure 13.1

- Switchable mill and lathe (turning) system in one simulator
- 3-axis milling / 2-axis turning system plus one spindle
- Manual Guide is installed for conversational program creation and 3D simulation
- Imperial / metric switchable
- 512KB part-program storage, with 400 registered programs
- 32 tool offset pairs
- Workpiece coordinates G52 – G59 plus 48 additional on mill

Figure 13.1 FANUC Simulator

Try

1. Perform the combination of CNC Simulator with CNC machining simulation software as shown in Figure 13.2.
   - The CNC Machining Simulator carries all the same features as the standard simulator with the addition of an internal PC, which will provide a virtual mill or lathe with real kinematics, allowing the user to view the live machine movement, tooling and part machining.

- Tool and workpiece setup is required and colored back plot, collision detection and sound bring the machine operating experience to life.

Figure 13.2 CNC Simulator with CNC machining simulation

14. Demonstration to cylindrical grinding machine

Most commonly, cylindrical grinding is used for grinding pieces with a central axis of rotation, like rods and cylinders. This process involves using a cylindrical grinder, which is a type of machinery categorized by rotation style and wheel device.

- A grinding machine uses an abrasive product usually a rotating wheel to shape and finish a workpiece by removing metal and generating a surface within a given tolerance. A grinding wheel is made with abrasive grains bonded together. Each grain acts as a cutting tool, removing tiny chips from the workpiece.

14.1 Demonstration on industry standard grinding as shown in Figure 14.1

- The ECO-200 Micromatic industry standard universal cylindrical grinding machine is used for grinding of components up to an accuracy of 5m and used for projects.

Figure 14.1 Cylindrical griding

Try

1. Demonstration grinding methods and machines
   - Grinding, or abrasive machining, once performed on conventional milling machines, lathes and shapers, is now performed on various types of grinding machines.
   - Grinding machines have advanced in design, construction, rigidity and application far more in the last decade than any other standard machine tool in the manufacturing industry. Grinding machines fall into five categories: surface grinders, cylindrical grinders, centerless grinders, internal grinders and specials.

V. TEXT BOOKS:

1. Hajra Choudhury S.K., Hajra Choudhury A.K. and NirjharRoy S.K., *Elements of Workshop Technology*, Media promoters and publishers private limited, Mumbai, 2020.
2. Kalpakjian S, Steven S. Schmid, *Manufacturing Engineering and Technology*, Pearson Education India Edition, 7th Edition, 2019.

VI. REFERENCE BOOKS:

1. Gowri P. Hariharan, A. Suresh Babu, *Manufacturing Technology – I*, Pearson Education, 2018.
2. Roy A. Lindberg, *Processes and Materials of Manufacture*, Prentice Hall India, 4th Edition, 2017.
3. P.N., *Manufacturing Technology*, Vol. I and Vol. II, Tata McGraw-Hill House, 2017.
4. Rupinder Singh, J. Paulo Davim, *Additive Manufacturing: Applications and Innovations*, CRC Press, 2nd Edition, August, 2021.
5. Jeyaprakash Natarajan, Muralimohan Cheepu, Che-Hua Yang, *Advances in Additive Manufacturing Processes*, Bentham Books, 4th Edition, September, 2021.

VII. ELECTRONICS RESOURCES:

1. https://elearn.nptel.ac.in/shop/iit-workshops/ongoing/additive-manufacturing-technologies-for-practicing-engineers/.
2. https://akanksha.iare.ac.in/index?route=course/details&course_id=94.

VIII. MATERIALS ONLINE:

3. Course Template
4. Lab manual

COURSE CONTENT

ELECTRICAL AND ELECTRONICS ENGINEERING LABORATORY								
I Semester: CSE (AI&ML) / IT / AERO / MECH / CIVIL **II Semester:** CSE / CSE(DS) / CSE(CS)								
Course Code	**Category**	**Hours / Week**			**Credits**	**Maximum Marks**		
AEED03	**Foundation**	**L**	**T**	**P**	**C**	**CIA**	**SEE**	**Total**
		-	-	2	1	40	60	100
Contact Classes: Nil	**Tutorial Classes: Nil**	**Practical Classes: 45**				**Total Classes: 45**		
Prerequisite: Nil								

I. COURSE OVERVIEW:

This course **serves** as a foundation course on electrical engineering. It **covers** a broad range of fundamental electrical circuits and devices. The **concepts** of current, voltage, power, basic circuit elements, electrical and electronic devices and their **application** in more complex electrical systems are to be imparted to the students.

II. COURSES OBJECTIVES:

The students will try to learn:

I. The basic laws for different circuits.
II. The elementary experimental and modeling skills for handling problems with electrical machines in the industries and domestic applications to excel in professional career.
III. The intuitive knowledge needed to test and test and analyze the performance leading to design of electric machines by conducting various tests and calculate the performance parameters.
IV. The semiconductor devices like diode and transistor.

III. COURSE OUTCOMES:

At the end of the course students should be able to:

CO1	Solve an electric circuit by providing laws and solving theorems.
CO2	Analyze the performance characteristics of DC shunt machine at various loading conditions
CO3	Examine the performance of induction motors by conducting a suitable test.
CO4	Acquire basic knowledge on the working of diodes to plot their characteristics
CO5	Identify transistor configuration and their working to deduce its working.
CO6	Use of the two port parameters to be measured easily, without solving for all the interna voltages and currents in the different networks.

Dos

1) For safety purpose the students should compulsory wear leather shoes.
2) Students should come in uniform prescribed.
   i. For boys, half sleeve shirts, tucked in trousers
   ii. For ladies, half sleeve overcoat, hair put inside the overcoat
3) After giving connections, staff members should be asked to verify the circuit connections.
4) Before staring the circuit connections check whether the circuit breaker is in OFF condition.
5) Circuit should be switched ON only after getting permission from the staff member.
6) To be careful with moving parts in the machine.
7) To come prepared with procedure relevant to the experiment.
8) Unplug electrical equipment after use.

Dont's

1) Don't assume that the power is disconnected.
2) Don't attempt to repair electrical equipment.
3) Don't come with any ornaments when working with electrical machines.
4) Don't use an earth connection as a neutral.
5) Don't touch any parts unnecessarily.
6) Don't keep any fluids and chemicals nearing instruments and circuits.

IV. COURSE CONTENT:

EXERCISES FOR ELECTRICAL AND ELECTRICAL ENGINEERING LABORATORY

Note: Students are encouraged to bring their own laptops for laboratory practice session

1. Getting Started Exercises

1.1 Introduction to electrical circuits

1. Understand the basic electrical equipment's used in the laboratory.
2. Become familiar with the operation and usage of basic DC electrical laboratory devices, namely DC power supplies and digital multimeter's.
3. Learn the measurement of resistance values using colour code and digital multimeter.
4. Learn the basics of circuit design using Simulink.

Try

1.Calculate the resistance value of Resistor – 1, Resistor – 2 and Resistor – 3 using colour code and verify using a digital multimeter.

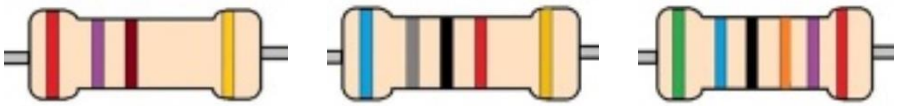

Resistor – 1 Resistor – 2 Resistor – 3

2. Design Circuit – 1 using Simulink and find the voltages V_1, V_2, V_3 and Current I. Where $V_s = 6$ V, $R_1 = 100\ \Omega$, $R_2 = 220\ \Omega$, $R_3 = 1k\ \Omega$.

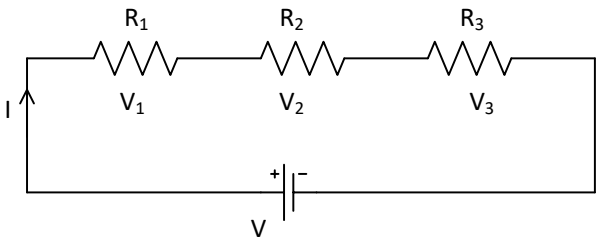

Circuit – 1

3. Design Circuit – 2 using Simulink and find the currents I_1, I_2 and I_3. Where $V_s = 6$ V, $R_1 = 100\ \Omega$, $R_2 = 220\ \Omega$, $R_3 = 1k\ \Omega$.

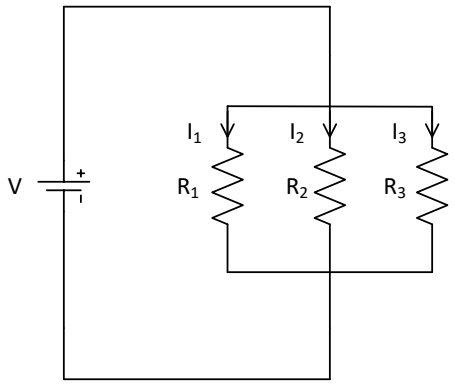

Circuit – 2

2. Exercises on Basic Electrical Circuit Law's

2.1 Ohm's law

1.Examine Ohm's law of Circuit – 3 and draw the V-I characteristic of linear resistors R = 1k Ω

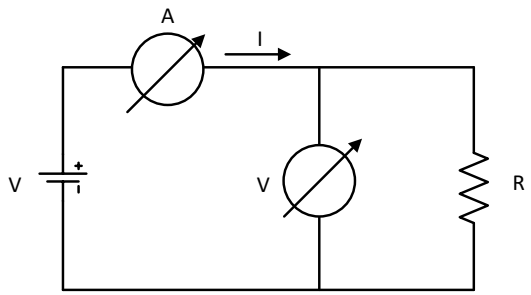

Circuit - 3

Try

1. Verify Ohm's law of Circuit – 3 using Simulink and draw the V-I characteristics of a linear resistor R = 470 k Ω
2. An electric heater takes 1.48 kW from a voltage source of 220 V. Find the resistance of the heater.

2.2 Kirchhoff's voltage law

1. Examine Kirchhoff's voltage law using basic series DC Circuit - 4 with resistors. Where V_s = 6 V, R_1 = 100 Ω, R_2 = 220 Ω, R_3 = 1k Ω.

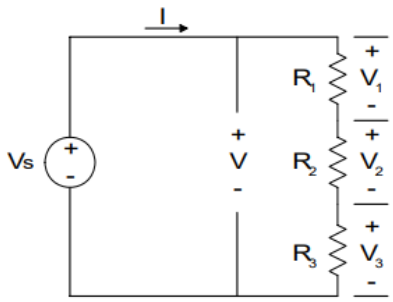

Circuit – 4

Try

1. Design and Verify Kirchhoff's voltage law for Circuit – 4 using Simulink.
2. Determine the voltage V_2 by replacing the resistor R_2 = 150 Ω.
3. Find the total current I flowing through the Circuit – 4.

2.3 Kirchhoff's current law

1. Examine Kirchhoff's current law using basic parallel DC Circuits - 5 with resistors. Where V_s = 6 V, R_1 = 100 Ω, R_2 = 220 Ω, R_3 = 1k Ω

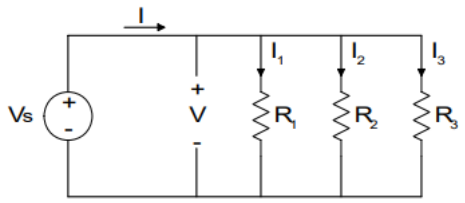

Circuit – 5

Try

1. Design and Verify Kirchhoff's current law for Circuit – 5 using Simulink.
2. Determine the voltage I_2 by replacing the resistor $R_2 = 150\ \Omega$.

3. Exercises on Mesh Analysis

1.Determine mesh currents in the complex electrical Circuit - 6 by using principles of basic electrical circuits. Where $R_0 = 47\Omega$, $R_1 = 100\ \Omega$, $R_2 = 220\ \Omega$, $R_3 = 1k\ \Omega$, $R_4 = 150\ \Omega$, $R_5 = 82\ \Omega$, $R_6 = 100\ \Omega$.

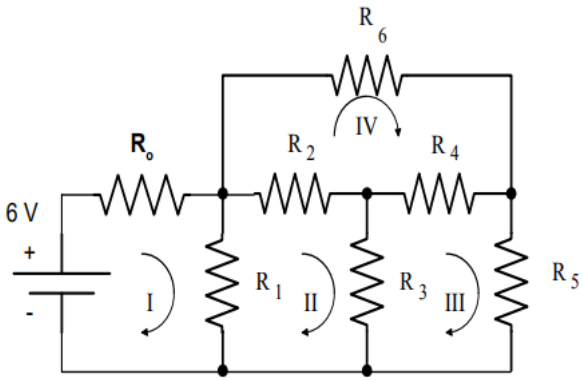

Circuit – 6

Try

1. Use Simulink to simulate the Circuit – 6 for determining the current flowing through each resistor and compare these values to those you obtained from your experiments.
2. Find the current flowing through the resistor R_2 and R_3 by replacing the values of the resistors $R_2 = 100\ \Omega$, $R_3 = 470\ \Omega$.
3. Find the current flowing through the resistor R_3 for Circuit – 7 using mesh analysis when V1 = 10V, $V_2 = 6V$, $R_1 = 100\ \Omega$, $R_2 = 220\ \Omega$ and $R_3 = 1k\ \Omega$.

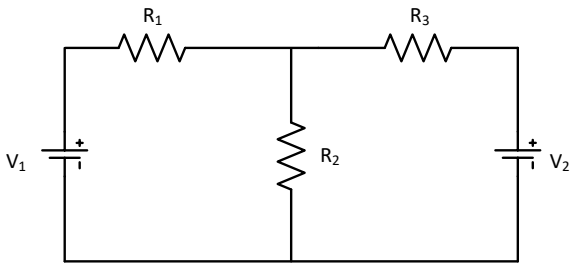

Circuit – 7

4. Exercises on Nodal Analysis

1. Determine nodal voltages in complex electrical Circuit – 8 by using principles of basic electrical circuits. Where $R_0 = 47\Omega$, $R_1 = 100\ \Omega$, $R_2 = 220\ \Omega$, $R_3 = 1k\ \Omega$, $R_4 = 150\ \Omega$, $R_5 = 82\ \Omega$, $R_6 = 100\ \Omega$.

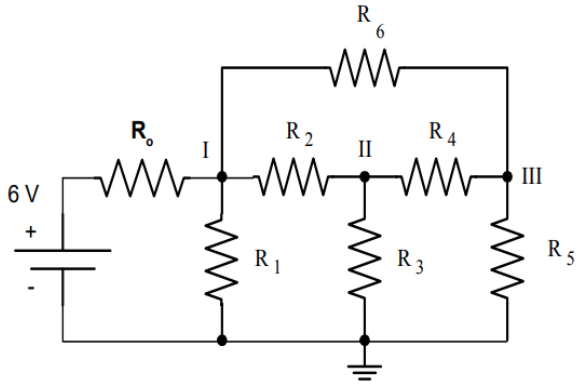

Circuit – 8

Try

1. Use Simulink to simulate the Circuit – 8 for determining the voltage across each resistor and compare these values to those you obtained from your experiments
2. Determine the voltage at node - II by replacing the resistor $R_2 = 150\ \Omega$
3. Find the voltage V_1 for Circuit – 7 using nodal analysis when V1 = 10V, $V_2 = 6V$, $R_1 = 100\ \Omega$, $R_2 = 220\ \Omega$ and $R_3 = 1k\ \Omega$.

5. Exercises on Thevenin's Theorem

1. Determine Thevenin's equivalent voltage (V_{th}) and resistance (R_{th}) at the load terminals by applying Thevenin's theorem for Circuit – 9.
2. Determine load or unknown current through a R_4 resistor using Thevenin's equivalent circuit. Where V = 10V, $R_1 = 100\ \Omega$, $R_2 = 220\ \Omega$, $R_3 = 1k\ \Omega$ and $R_4 = 150\ \Omega$

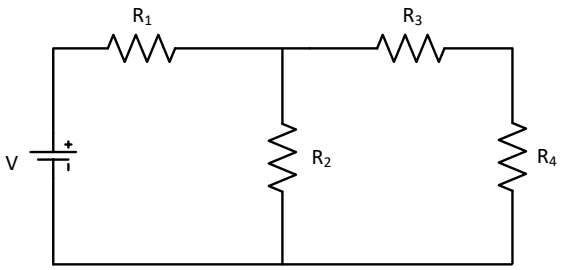

Circuit – 9

Try

1. Use Simulink to simulate the Circuit – 13 for determining the current thought R_4 resistor using Thevenin's theorem and compare this value to those you obtained from your experiment.
2. Find the current thought R_4 resistor using any circuit reduction technique and verify this value to those you obtained from Thevenin's theorem.
   Find the current flowing through R_2 resistor in Circuit – 10 using Thevenin's theorem for the below circuit. Where $V_1 = 10V$, $V_2 = 5V$, $R_1 = 100\ \Omega$, $R_2 = 220\ \Omega$, $R_3 = 1k\ \Omega$

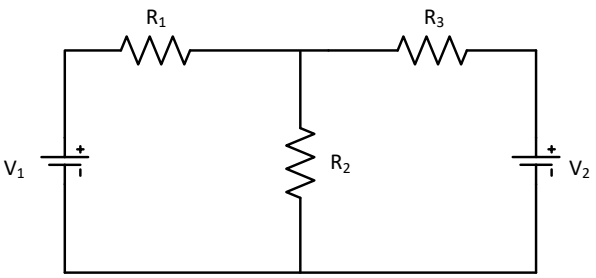

Circuit – 10

6. Exercises on Norton's Theorem

1. Find Norton equivalent current (I_N) and resistance (R_N) by considering $R_L = 150\ \Omega$ resistor for the Circuit – 15 by applying Norton's theorem.
2. Find load or unknown current through R_L resistor using Norton's equivalent circuit. Where V = 10V, $R_1 = 100\ \Omega$, $R_2 = 220\ \Omega$ and $R_3 = 1k\ \Omega$.

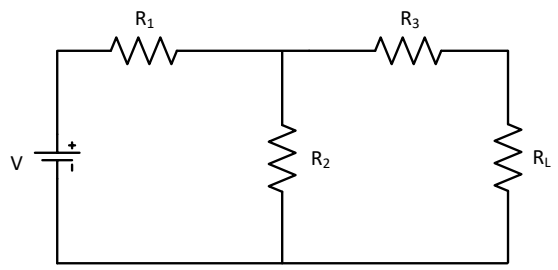

Circuit – 11

Try

1. Use Simulink to simulate the Circuit – 11 for determining the current through R_L resistor and compare this value to those you obtained from your experiment
2. Find the current thought R_L using any circuit reduction technique and verify this value to those you obtained from Norton's theorem.

7. Exercises on Superposition Theorem

1. Investigate the current thought R_2 resistor using superposition theorem to multiple DC source
   Circuit - 16

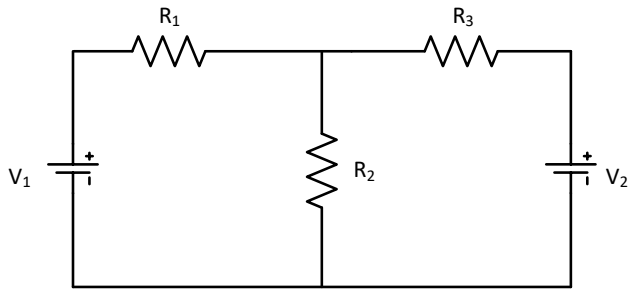

Circuit – 12

Try

1. Use Simulink to simulate the Circuit – 12 for determining the current through a R_2 resistor and compare this value to those you obtained from your experiment
2. Find the current thought R_2 in Circuit – 12 using any circuit reduction technique and verify this value to those you obtained from the superposition theorem.
3. Find the current through the R_4 resistor using the superposition theorem for the Circuit – 13.

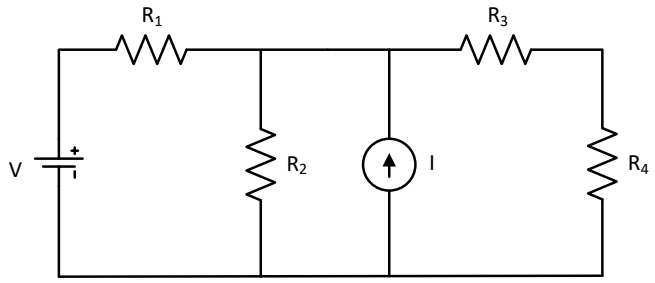

Circuit – 13

8. Exercises on Reciprocity Theorem

1. Understand the reciprocity theorem by analyzing Circuit – 14 with interconnected components using fundamental circuit laws where V = 10 V, R_1 = 100 Ω, R_2 = 220 Ω, R_3 = 1k Ω, R_4 = 150 Ω and R_5 = 82 Ω.

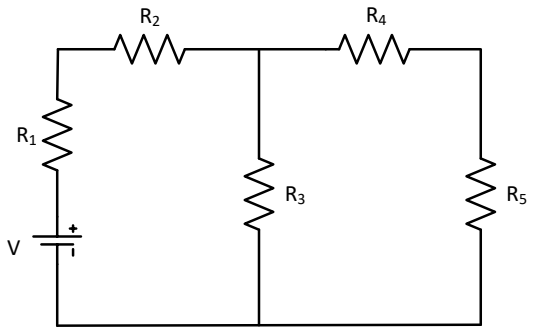

Circuit – 14

Try

1. Use Simulink to simulate Circuit–14 for determining the current through R_5 and R_1 by interchanging the voltage source in series with the R_5 resistor and compare this value to those you obtained from your experiment
2. Find the current thought R_3 using Thevenin's theorem.

9. Swinburne's test and speed control of dc shunt motor

1. Design the suitable test under no load conditions to measure no load losses in Dc shunt machines and speed control of DC shunt motor.

Try

1. Calculate the output power and efficiency when motor takes 10A on full load and 5A on half Load.
2. Measure the no load machine losses by using indirect method of testing.
3. Perform the speed control by varying the armature circuit resistance and field circuit resistance of DC shunt motor.

10 magnetization characteristics of dc shunt generator

1. Develop the circuit for analyzing the magnetization characteristics of DC shunt generator.

Try

1. From the Open circuit characteristics calculate the critical resistance of field winding.
2. Using magnetization characteristics calculate the critical speed of DC shunt generator at 100 Ω
3. Determine the performance of DC generator using the magnetization curve.
4. Calculate the critical value of shunt field resistance at 1500 rpm

11 Exercises on PN junction diode characteristics

Study the characteristics of PN junction diode as shown in Figure. 1

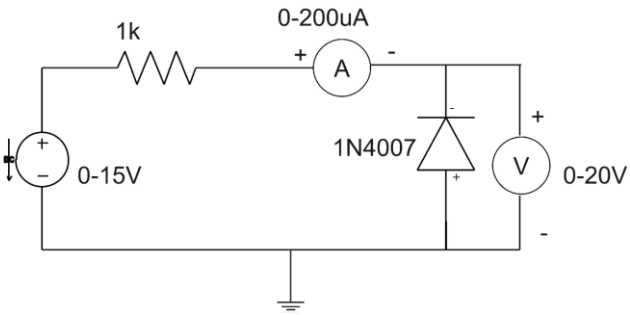

Figure. 1 diode as forward bias

Try

1. Plot the V-I Characteristics of germanium diode and find the cut in voltage.
2. Design diode acts as switch and plot the switching times of diode.

12 Zener diode characteristics and voltage regulator

Study the characteristics of Zener diode as shown in Figure. 2

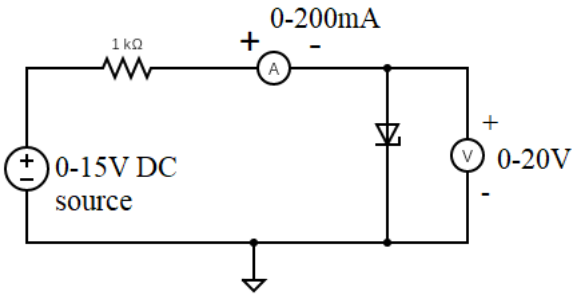

Figure. 2 Circuit diagram for Zener diode as forward bias

Try

1. Design a Zener voltage regulator circuit to drive a load of 6V, 100 mW from an unregulated
2. input supply of V_{min} = 8V, Vmax = 12V using a 6V Zener diode. .
3. Design square wave generator using Zener diode
4. Design for a Zener Transistor series voltage regulator circuit to drive a load of 6V, 1w,
5. from a supply of 10V with a ±3V ripple voltage

13 Half wave rectifier with/without filter

1. Design a half-wave rectifier circuit and analyze its output as shown in Figure. 3
2. Analyze the rectifier output using a capacitor in shunt as a filter as shown in Figure. 3

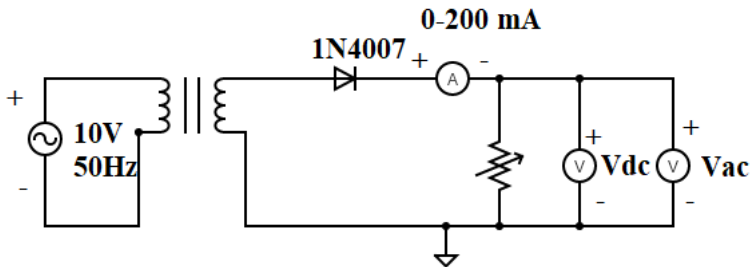

Figure. 3 Circuit Diagram for Half Wave Rectifier without Filter

Try

1. Design half wave rectifier with an applied input AC power is 100 watts, and it is to deliver an output power is 40 watts.
2. Design half wave rectifier with an AC supply of 230 V is applied through a transformer of turn ratio 10 : 1. Observe the output DC voltage, peak inverse voltage and identify dc output voltage if transformer turns ratio changed to 20:1.

14 Full wave rectifier with/without filter

1. Design a Full-wave rectifier circuit and analyse its output as shown in Figure. 4
2. Analyse the rectifier output using a capacitor in shunt as a filter as shown in Figure. 4

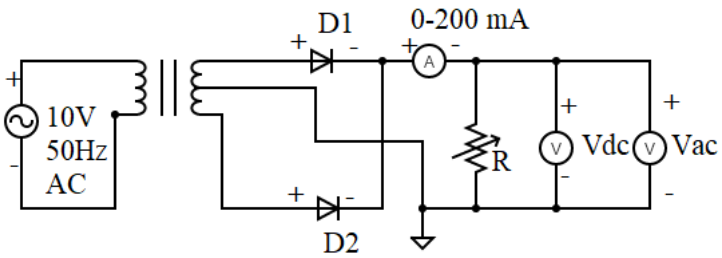

Figure 4: Circuit Diagram for Full Wave Rectifier without Filter

Try

1. Design a full wave rectifier with step down transformer and center tapped transformer. Justify the operation.
2. Design Full wave rectifier with capacitive filter using 10uF and 1uF. Observe the ripple

V. TEXT BOOKS:

1. A Chakrabarti, *CircuitTheory*, Dhanpat Rai Publications, 2004.

VI. REFERENCE BOOKS:

1. J P J Millman, C C Halkias, Satyabrata Jit, *Millman's Electronic Devices and Circuits*, Tata McGraw Hill, 2nd Edition, 1998.
2. RL Boylestad, Louis Nashelsky, *Electronic Devices and Circuits*, PEI/PHI, 9th Edition, 2006.

VII. ELECTRONICS RESOURCES:

1. https://www.nptel.ac.in/Courses/117106108
2. https://www.gnindia.dronacharya.info/EEEDept/labmanuals.html
3. https://www.textofvideo.nptel.iitm.ac.in
4. https://www.textofvideo.nptel.iitm.ac.in/

VIII. MATERIALS ONLINE

11. Course template
12. Lab manual

COURSE CONTENT

ESSENTIALS OF INNOVATION								
I Semester: AE / ME / CE / ECE / EEE / CSE (AI&ML) / IT **II Semester:** CSE / CSE (DS) / CSE (CS)								
Course Code	**Category**	**Hours / Week**			**Credits**	**Maximum Marks**		
ACSD03	**Foundation**	**L**	**T**	**P**	**C**	**CIA**	**SEE**	**Total**
		-	2	-	1	40	60	100
Contact Classes: Nil	**Tutorial Classes: Nil**	**Practical Classes: 45**				**Total Classes: 45**		
Prerequisite: There are no prerequisites to take this course								

I. COURSE OVERVIEW:

Essentials of Innovation and Design thinking is a strategic approach towards creative problem-solving by placing users'/customers' needs above everything else. It is a process of questioning: questioning the problem, questioning assumptions, and questioning the implications. As a process it is a great catalyst of change and evolution. A Design thinking approach helps develop and build a culture of innovation across the students.

II. COURSE OBJECTIVESS:

I. The implications of disruption and the role of innovation.
II. The various frameworks, tools, and techniques of design thinking.
III. How to design, develop and implement an innovation product or service or process.

III. COURSE CONTENT:

Module-I; Philosophy of Innovation and Design Thinking

- Introduction to Innovation and Design Thinking
- History and Philosophy of Design Thinking
- Design Thinking as Problem-Solving Tool
- Design Thinking and it's Benefits
- Design Thinking Mind-set

Module-2: Mechanics of Innovation and Design Thinking

- Integrative View of Design Thinking
- Design Thinking Process
- 5 Stages (Empathise, Define, Ideate, Prototype and Test)
- Conceptual Frameworks Used in Design Thinking Process
- Case Studeis

Module-3: Design Thinking for Understanding Customers

- Understanding the User and Context
- Market Research
- Visualization and Customer Journey Mapping
- Empathy Mapping
- Redefining Problems, Brainstorming
- Reframing the Perspectives
- Ideation and Creativity
- Creative Ideation Methodologies
- Sketching & Visualization
- Storytelling

Module-4: Implementing Design Thinking

- Innovating Products, Services and Business Models
- Concept Evaluation and Concept Development
- Applications of Design Thinking
- Designing for Tangibles and Intangibles
- Ideas and Opportunities for Products

Module-5: Innovation Management

- Introduction to Innovation Management
- Business, Product & Process Innovation
- Organization Innovation
- Innovating Products, Services and Business Models
- Crafting a Better World Using Design Thinking & Innovation
- Design Thinking, Innovation and Organization Strategy
- Idea Pitching and Validation

Text Books:

I. Nigel Cross, "*Design Thinking: Understanding How Designers Think and Work"*, Kindle Edition, 2011.
II. Tim Brown, Harper Bollins, "*Change by Design"*, 2009.
III. Idris Mootee, "*Design Thinking for Strategic Innovation"*, John Wiley & Sons, 2013.

COURSE CONTENT

GENDER SENSITIZATION								
II Semester: AE / ME / CE / ECE / EEE / CSE / CSE (CS) / CSE(DS) / CSE (AI & ML) / IT								
Course Code	**Category**	**Hours / Week**			**Credits**	**Maximum Marks**		
AHSD10	**Mandatory**	**L**	**T**	**P**	**C**	**CIA**	**SEE**	**Total**
		-	-	-	-	-	-	-
Contact Classes: Nil	**Tutorial Classes: Nil**	**Practical Classes: Nil**				**Total Classes: Nil**		
Prerequisite:								

I. COURSE OVERVIEW:

The course aims at raising awareness of gender equality among students from sociological, cultural, psychological, legal and economical perspectives, thereby empowering them to communicate better in a cross-cultural work ambience. At the end of this course the students expose to better egalitarian interactions between men and women and to enable them see diversity and inclusiveness as assets in a globalized scenario.

II. COURSES OBJECTIVES:

The students will try to learn

I. The basic gender concepts and their application to the long- term implementation of programming and initiatives.
II. The gender roles, expectations and issues and their impact on as the community's day-to-day life.
III. The more egalitarian interactions between men and women.

III. COURSE OUTCOMES:

At the end of the course students should be able to:

CO 1 Develop a better understanding of important issues related to gender in contemporary India.
CO 2 Sensitize to the basic dimensions of the biological, sociological, psychological and legal aspects of gender.
CO 3 Acquire insight into the gendered division of labor and its relation to politics and economics.
CO 4 Attain a finer grasp of how gender discrimination works in our society and how to counter it.
CO 5 Men, women and professionals will be better equipped to work and live together as equals.
CO 6 Know the new laws that provide protection and relief to women.

IV. SYLLABUS:

MODULE–I: UNDERSTANDING GENDER

Introduction: definition of gender, basic gender concepts and terminology, exploring attitudes towards gender, construction of gender. Socialization: making women, making men, preparing for womanhood. growing up male, first lessons in caste.

MODULE – II: GENDER ROLES AND RELATIONS

Two or many; struggles with discrimination; Gender roles and relations: types of gender roles, gender roles and relationships matrix, missing women, sex selection and its consequences, declining sex ratio, demographic consequences; Gender Spectrum: Beyond the Binary.

MODULE-III: GENDER AND LABOUR

Division and valuation of labour; Housework: the invisible labor, my mother doesn't work. Share the load work: its politics and economics, fact and fiction. unrecognized and unaccounted work; gender development issues gender, governance and sustainable development; gender and human rights; gender and mainstreaming.

MODULE–IV: GENDER AND BASED VIOLENCE

The concept of violence; types of gender; based violence, gender, based violence from a human Rights perspective, Sexual harassment: say no sexual harassment, not eve-teasing-, coping with everyday harassment, further reading, chupulu. Domestic violence: speaking out is home a safe place, when women unite (Film). rebuilding lives, thinking about sexual violence blaming the victim, i fought for my Life.

MODULE–V: GENDER AND CULTURE

Gender and film; gender and electronic media; gender and advertisement; gender and popular, literature, Gender development issues, gender issues, gender sensitive language, gender and popular literature. Just relationships: being together as equals; Mary kom and onler, love and acid just do not mix, love letters, mothers and fathers, Rosa Parks, the brave heart.

V. TEXT BOOKS:

1. A. Suneetha, Uma Bhrugubanda, DuggiralaVasanta, Rama Melkote, Vasudha Nagaraj, Asma Rasheed, Gogu Shyamala, Deepa Sreenivas and Susie Tharu The Textbook, *Towards a World of Equal: A Bilingual Textbook on X Gender*, published by Telugu Academy, Telangana Government, 1st Edition, 2015.

VI. REFERENCE BOOKS:

1. Kadambari V, *Gender Studies: A Primer. Rajiv Gandhi National Institute of Youth Development, Sriperumbudur.* 1st Edition, 2009.
2. C. Rajya Lakshmi Kalyani, D.S. Vittal, A. Kanaka Lakshmi, P. Chandrakala, B. Lavanya., *Gender Sensitization*, Himalaya Publishing House. 1st Edition, 2017.

VII.ELECTRONICSRESOURCES:

1. https://en.unesco.org/women-make-the-news-2017/resources
2. http://ncw.nic.in/sites/default/files/Booklet-%20Gender%20Sensitization_0.pdf

COURSE CONTENT

DIGITAL DESIGN AND EMBEDDED SYSTEM								
III Semester: CSE / CSE (CS) / CSE(DS) / CSE (AI & ML) / IT								
Course Code	**Category**	**Hours / Week**			**Credits**	**Maximum Marks**		
AECD04	**Foundation**	**L**	**T**	**P**	**C**	**CIA**	**SEE**	**Total**
		3	-	-	3	40	60	100
Contact Classes: 48	**Tutorial Classes: Nil**	**Practical Classes: Nil**				**Total Classes: 48**		
Prerequisite: Nil								

I. COURSE OVERVIEW:

The course introduces the basic knowledge of digital circuits and embedded systems. It covers design of switching circuits as combinational and sequential to verify the relation between input and output. They will learn to design counters, adders, sequence detectors. This course provides a platform for advanced courses like Computer architecture, Microprocessors & Microcontrollers and VLSI design.

II. COURSES OBJECTIVES:

The students will try to learn

I. The basic concept of number systems, Boolean algebra and simplification of the logic functions.
II. The Implementation of conventional combinational and sequential circuits.
III. Implementation of conventional combinational and sequential circuits including conversions of flip-flops.
IV. Understand the basics of an embedded system, understand the typical components of an embedded system.
V. To understand different communication interfaces.

III. COURSE OUTCOMES:

At the end of the course students should be able to:

CO1 Outline binary arithmetic operations and optimize Boolean functions using Karnaugh and tabulation method.
CO2 Make use of basic logic gates to realize the combinational logic circuits used in conventional electronic circuits.
CO3 Implementation of conventional combinational and sequential circuits including conversions of flip-flops.
CO4 Understand the design process of an embedded system.
CO5 Understand typical embedded System & its components.
CO6 Understand embedded firmware design approaches.

IV. COURSE CONTENT:

MODULE - I: NUMBER SYSTEMS AND BOOLEAN ALGEBRA (09)

Number systems, Complements of Numbers, Binary codes, Code Conversion, hamming code, Addition, subtraction, multiplication and division of binary numbers, Digital Logic Gates, Universal Gates, Laws of Boolean algebra and De Morgan's Theorem, SOP & POS forms, Canonical forms, Karnaugh maps up to 5 variables, Tabular Method

MODULE –II: COMBINATIONAL LOGIC CIRCUITS (09)

Half and Full Adders, Subtractors, Binary adders, Carry look ahead adder, Comparators, Multiplexers, Demultiplexers, Encoder, Decoder, Priority encoder, Parity generator/checker, Code converters, 8bit ALU.

MODULE –III: SEQUENTIAL LOGIC DESIGN (10)

Building blocks like S-R, JK and Master-Slave JK FF, Edge triggered FF, Ripple and Synchronous counters, Shift registers.

Finite state machines, Design of synchronous FSM, Algorithmic State Machines charts. Designing synchronous circuits like Pulse train generator, Pseudo Random Binary Sequence generator, Clock generation

MODULE –IV: INTRODUCTION TO EMBEDDED SYSTEMS (10)

History of embedded systems, Classification of embedded systems based on generation and complexity, Purpose of embedded systems, The embedded system design process-requirements, specification, architecture design, designing

hardware and software, components, system integration, Applications of embedded systems, and characteristics of embedded systems.

MODULE –V: TYPICAL EMBEDDED SYSTEM (10)

Core of the embedded system-general purpose and domain specific processors, ASICs, PLDs, COTs; Memory-ROM, RAM, memory according to the type of interface, memory shadowing, memory selection for embedded systems, Sensors, actuators, I/O components: seven segment LED, relay, piezo buzzer, push button switch, other sub-systems: reset circuit, brownout protection circuit, oscillator circuit real time clock, watch dog timer.

V. TEXT BOOKS:

1. R.P. Jain, "Modern digital Electronics", Tata McGraw Hill, 4th edition, 2009.
2. Shibu K V, "Introduction to Embedded Systems" , McGraw Hill Education.
3. Wayne Wolf, "Computers as Components", Morgan Kaufmann, 2nd edition, 2010.

VI. REFERENCE BOOKS:

1. Morris Mano, "Digital Design", 4th edition, 2006.
2. W.H. Guthman, "Digital Electronics- An Introduction to Theory and Practice", 2nd edition, 2006.
3. Lyla B Das, Embedded Systems - An Integrated Approach", Pearson education, 2012.
4. frank Vahid, tony Gravari's, "Embedded System Design", john Wiley, 2nd edition, 2006.

VII. ELECTRONIC RESOURCES:

1. http://nptel.ac.in/courses/117106086/1
2. http://books.askvenkat.com
3. mcsbzu.blogspot.com
4. NPTE: nptel.ac.in/noc
5. NPTEL: digital design and embedded system

VIII. MATERIALS ONLINE

1. Course template
2. Tutorial question bank
3. Definition and terminology
4. Tech-talk topics
5. Assignments
6. Model question paper - I
7. Model question paper - II
8. Lecture notes
9. Early learning readiness videos (ELRV)
10. Power point presentations

COURSE CONTENT

COMPUTER ARCHITECTURES AND OPERATING SYSTEMS								
III Semester: CSE / CSE (CS) / CSE(DS) / CSE (AI & ML) / IT								
Course Code	**Category**	**Hours / Week**			**Credits**	**Maximum Marks**		
ACSD09	**Core**	**L**	**T**	**P**	**C**	**CIA**	**SEE**	**Total**
		3	0	0	3	40	60	100
Contact Classes: 48	**Tutorial Classes: Nil**	**Practical Classes: Nil**				**Total Classes: 48**		
Prerequisite: Python Programming								

I. COURSE OVERVIEW:

Computer Architecture And Operating Systems course provides theoretical knowledge about the computer architecture; the structure of operating systems, process, memory management and virtual memory implementation principles, input-output management and deadlock avoidance, file system structure. It deals with the transfer of programs in and out of memory; organizes processing time between programs and users. Learned knowledge will be implemented in design and development of hybrid operating systems, command control systems, and in real time environments.

II. COURSE OBJECTIVES:

The students will try to learn

I. The concepts of register transfer logic and arithmetic operations, instruction format and instruction cycle.
II. The basic components of computer systems besides the computer arithmetic operations
III. The functionalities of main components in operating systems and analyze the algorithms used in process management.
IV. Algorithms used in memory management and I/O management
V. Different methods for preventing or avoiding deadlocks and File systems.

III. COURSE OUTCOMES:

At the end of the course students should be able to:

CO1 Demonstrate the implementation of micro-operations with the help of register transfer language and electronic circuits.
CO2 Identify appropriate addressing modes for specifying the location of an operand and Make use of number system for data representation and binary arithmetic in digital computers.
CO3 Solve problems related to process scheduling, and deadlock handling in UNI and multi-processing systems.
CO4 Choose memory allocation algorithms for effective utilization of resources and select various page replacement algorithms applied for allocation of frames..
CO5 Make use of different file allocation and disk scheduling algorithms applied for efficient utilization of storage.

IV. COURSE CONTENT:

MODULE – I: INTRODUCTION (10)

Central Processing Unit: Introduction, General Register Organization, Stack organization Computer Organization, Register transfer: Register transfer language, register transfer, bus and memory transfers, arithmetic micro operations, logic micro operations, shift micro operations;
Control unit: Control memory, address sequencing, micro program example, and design of control unit.

MODULE – II: CPU AND COMPUTER ARITHMETIC (09)

CPU design: Instruction cycle, data representation, memory reference instructions, input-output, and interrupt,addressing modes, data transfer and manipulation, program control.
Computer arithmetic: Addition and subtraction, floating point arithmetic operations, decimal arithmetic unit.

MODULE – III: PROCESS MANAGEMENT (10)
Introduction: Operating system structures, System components, OS services.

Process Management: Processes, Process concepts, Process scheduling, CPU scheduling, Scheduling algorithms, Preemptive strategies, Non-preemptive strategies.

MODULE – IV: MEMORY MANAGEMENT AND I/O MANAGEMENT (09)
Storage Management Strategies , Contiguous vs. non-contiguous storage allocation, Paging , Segmentation, demand paging , Page replacement strategies

I/O Management: Basic approaches in I/O (polled, overlapped – e.g. interrupt driven, DMA), Structure of disk sectors, Disk scheduling (FCFS, Shortest Seek Time First, Elevator algorithm, Cyclic scan)

MODULE –V: DEADLOCKS AND FILE SYSTEM (10)
Deadlocks - Deadlock characterization, Prevention, Avoidance, Detection, Recovery.
File System: The concept of a file, access methods, directory structure, file system mounting, file sharing, protection, file system structure, file system implementation, allocation methods

V. TEXT BOOKS:

1. M.Morris Mano, ;Computer System Architecture", Prentice-Hall Publishers, Third Edition.
2. John P Hayes, 'Computer Architecture and Organization', McGraw Hill international edition, hird Edition.
3. Abraham Silberschatz,Peter Galvin and Gagne, "Operating System Concepts", Addison Wesley, 6th edition 2002.

VI. REFERENCE BOOKS:

1. Carl Hamachar, Zvonco Vranesic and Safwat Zaky, "Computer Organization", McGraw-Hill.
2. Harvey M.Deitel, "Operating System", Addison Wesley, 2nd edition, 2000.

VII. ELECTRONICS RESOURCES:

1. https://cse.iitkgp.ac.in/~ksrao/caos2018files/caos-intro.pdf
2. https://cs.sdsu.edu/master-exams/operating-systems-architecture/

VIII. MATERIALS ONLINE

1. Course template
2. Tutorial question bank
3. Tech-talk topics
4. Open-ended experiments
5. Definitions and terminology
6. Assignments
7. Model question paper – I
8. Model question paper – II
9. Lecture notes
10. PowerPoint presentation
11. E-Learning Readiness Videos (ELRV)

COURSE CONTENT

DATA STRUCTURES								
III Semester: AE / ME / CE / CSE / CSE (AI & ML) / CSE (DS) / CSE (CS) / IT / ECE / EEE								
Course Code	**Category**	**Hours / Week**			**Credits**	**Maximum Marks**		
		L	**T**	**P**	**C**	**CIA**	**SEE**	**Total**
ACSD08	**Core**	3	-	-	3	40	60	100
Contact Classes: 48	**Tutorial Classes: Nil**	**Practical Classes: Nil**				**Total Classes: 48**		
Prerequisite: Essentials of Problem Solving								

I. COURSE OVERVIEW:

The course covers some of the general-purpose data structures and algorithms, and software development. Topics covered include managing complexity, analysis, static data structures, dynamic data structures and hashing mechanisms. The main objective of the course is to teach the students how to select and design data structures and algorithms that are appropriate for problems that they might encounter in real life. This course reaches to student by power point presentations, lecture notes, and lab which involve the problem solving in mathematical and engineering areas.

II. COURSES OBJECTIVES:

The students will try to learn

I. The skills needed to understand and analyze performance trade-offs of different algorithms / implementations and asymptotic analysis of their running time and memory usage.
II. The basic abstract data types (ADT) and associated algorithms: stacks, queues, lists, tree, graphs, hashing and sorting, selection and searching.
III. The fundamentals of how to store, retrieve, and process data efficiently.
IV. The implementing these data structures and algorithms in Python.
V. The essential for future programming and software engineering courses.

III. COURSE OUTCOMES:

At the end of the course students should be able to:

CO 1 Interpret the complexity of the algorithm using the asymptotic notations.
CO 2 Select the appropriate searching and sorting technique for a given problem
CO 3 Construct programs on performing operations on linear and nonlinear data structuresfor organization of a data
CO 4 Make use of linear data structures and nonlinear data structures solving real-time applications.
CO 5 Describe hashing techniques and collision resolution methods for accessing data with respect to performance
CO 6 Compare various types of data structures; in terms of implementation, operations and performance.

IV. COURSE CONTENT:

MODULE – I: INTRODUCTION TO DATA STRUCTURES, SEARCHING AND SORTING (09)

Basic concepts: Introduction to data structures, classification of data structures, operations on data structures, Algorithm Specification, Recursive algorithms, Data Abstraction, Performance analysis- time complexity and space complexity, Introduction to Linear and Non Linear data structures,Searching techniques: Linear and Binary search, Uniform Binary Search, Interpolation Search, Fibonacci Search; Sorting techniques: Bubble, Selection, Insertion, and Quick, Merge, Radix and Shell Sort and comparison of sorting algorithms.

MODULE – II: LINEAR DATA STRUCTURES (09)

Stacks: Stack ADT, definition and operations, Implementations of stacks using array, applications of stacks, Arithmetic expression conversion and evaluation; Queues: Primitive operations; Implementation of queues using Arrays, applications of linear queue, circular queue and double ended queue (deque).

MODULE – III: LINKED LISTS (09)

Linked lists: Introduction, singly linked list, representation of a linked list in memory, operations on a single linked list; Applications of linked lists: Polynomial representation and sparse matrix manipulation.

Types of linked lists: Circular linked lists, doubly linked lists; Linked list representation and operations of Stack, linked list representation and operations of queue.

MODULE – IV: NON LINEAR DATA STRUCTURES (09)

Trees: Basic concept, binary tree, binary tree representation, array and linked representations, binary tree traversal, binary tree variants, threaded binary trees, application of trees, Graphs: Basic concept, graph terminology, Graph Representations - Adjacency matrix, Adjacency lists, graph implementation, Graph traversals – BFS, DFS, Application of graphs, Minimum spanning trees – Prims and Kruskal algorithms.

MODULE – V: BINARY TREES AND HASHING (09)

Binary search trees: Binary search trees, properties and operations; Balanced search trees: AVL trees; Introduction to M- Way search trees, B trees; Hashing and collision: Introduction, hash tables, hash functions, collisions, applications of hashing.

V. TEXT BOOKS:

1. Rance D. Necaise, "Data Structures and Algorithms using Python", Wiley Student Edition.
2. Benjamin Baka, David Julian, "Python Data Structures and Algorithms", Packt Publishers, 2017.

VI. REFERENCE BOOKS:

1. S. Lipschutz, "Data Structures", Tata McGraw Hill Education, 1st edition, 2008.
2. D. Samanta, "Classic Data Structures", PHI Learning, 2nd edition, 2004.

VII. ELECTRONIC RESOURCES:

1. https://www.tutorialspoint.com/data_structures_algorithms/algorithms_basics.htm
2. https://www.codechef.com/certification/data-structures-and-algorithms/prepare
3. https://www.cs.auckland.ac.nz/software/AlgAnim/dsToC.html
4. https://online-learning.harvard.edu/course/data-structures-and-algorithms

VIII. MATERIALS ONLINE

1. Course template
2. Tutorial question bank
3. Definition and terminology
4. Tech-talk topics
5. Assignments
6. Model question paper - I
7. Model question paper - II
8. Lecture notes
9. Early learning readiness videos (ELRV)
10. Power point presentations

COURSE CONTENT

PROBABILITY AND STATISTICS								
III Semester: AE / ME / CE / CSE / CSE(AI&ML) / CSE(DS) / CSE(CS) / IT								
Course Code	**Category**	**Hours/Week**			**Credits**	**Maximum Marks**		
AHSD11	**Foundation**	**L**	**T**	**P**	**C**	**CIA**	**SEE**	**Total**
		3	1	-	4	40	60	100
Contact Classes: 48	**Tutorial Classes: 16**	**Practical Classes: Nil**				**Total Classes: 64**		
Prerequisite:								

I. COURSE OVERVIEW:

Probability theory is the branch of mathematics that deals with modelling uncertainty. The course includes: Baye's theorem, random variables, probability distributions, hypothesis testing, confidence interval and linear regression. The use of probability models and statistical methods is for analyzing data, designing, manufacturing a product and the observed class frequencies for engineering and sciences.

II. COURSE OBJECTIVES:

The students will try to learn:

I The theory of random variables, basic random variate distributions and their applications.

II The methods and techniques for quantifying the degree of closeness among two or more variables and the concept of linear regression analysis.

III The estimation statistics and hypothesis testing which play a vital role in the assessment of the quality of the materials, products and ensuring the standards of the engineering process.

IV The statistical tools which are essential for translating an engineering problem into probability model.

III. COURSE OUTCOMES:

At the end of the course students should be able to:

CO 1 Explain the probability elementary theorems on probability conditional, multiplication, Baye's theorem under randomized probabilistic conditions.

CO 2 Apply the role of random variables and types of random variables, expected values of the discrete and continuous random variables under randomized probabilistic conditions

CO 3 Apply the parameters of random variable Probability distributions such as Binomial, Poisson by using their probability functions,

CO 4 Interpret the parameters of random variate Probability distributions such as Binomial, Poisson and Normal distribution by using their probability functions, expectation and variance

CO 5 Make Use of estimation statistics in computing confidence intervals by Correlation Analysis, Regression analysis

CO 6 Identify the role of statistical hypotheses, types of errors, confidence intervals, the tests of hypotheses for large and small sample, in making decisions over statistical claims in hypothesis testing.

IV. COURSE CONTENT:

MODULE-I: PROBABILITY (10)

Probability, axiomatic approach, elementary theorems on probability, conditional probability, multiplication theorem, Bayes theorem (without proof).

MODULE-II: RANDOM VARIABLES (09)

Random variables: Discrete and continuous random variables, probability distribution, probability mass function and probability density function.

MODULE-III: PROBABILITY DISTRIBUTION (10)

Binomial distribution: Mean and variance of Binomial distribution, Poisson distribution: Poisson distribution as a limiting case of Binomial distribution, mean and variance of Poisson distribution.

Normal distribution: mean, variance, mode, median of Normal distribution.

MODULE-IV: CORRELATION AND REGRESSION (09)

Correlation- Karl Pearson's coefficient of correlation, rank correlation, repeated ranks. Regression: Lines of regression, regression coefficient, angle between two regression lines.

MODULE-V: TEST OF HYPOTHESIS (10)

Population, Sample, standard error; Test of significance: Null hypothesis, alternate hypothesis. Types of errors, level of significance.

Large sample tests: Test of hypothesis for single mean, difference between means, single proportion and difference between proportions. Small sample tests: Student's t-distribution, F-distribution and Chi-square distribution.

V. TEXT BOOKS:

1. Erwin Kreyszig, "*Advanced Engineering Mathematics*", John Wiley and Sons Publishers, 9th Edition, 2014.
2. B. S. Grewal, *Higher Engineering Mathematics*, 44/e, Khanna Publishers, 2017.

VI. REFERENCE BOOKS:

1. S. C. Gupta, V. K. Kapoor, "*Fundamentals of Mathematical Statistics*", S. Chand and Co., 10th Edition, 2000.
2. N.P. Bali and Manish Goyal, *A text book of Engineering Mathematics*, Laxmi Publications, Reprint, 2008.
3. Richard Arnold Johnson, Irwin Miller and John E. Freund, "*Probability and Statistics for Engineers*", Prentice Hall, 8th Edition, 2013.

VII. ELECTRONIC RESOURCES:

1. http://e4uhu.com/down/Applied/9th
2. https://toaz.info/32fa2f50-8490-42cf-9e6a-f50cb7ea9a5
3. http://www.mathworld.wolfram.com

VIII. MATERIAL ONLINE:

1. Course template
2. Tech-talk topics
3. Assignments
4. Open end experiments
5. Definition and terminology
6. Tutorial question bank
7. Model question paper – I
8. Model question paper – II
9. Lecture notes
10. Early lecture readiness videos (ELRV)
11. Power point presentations

COURSE CONTENT

MATHEMATICS FOR COMPUTING								
III Semester: CSE / IT								
Course Code	**Category**	**Hours / Week**			**Credits**	**Maximum Marks**		
		L	**T**	**P**	**C**	**CIA**	**SEE**	**Total**
AITD01	**Core**	3	0	0	3	40	60	100
Contact Classes: 45	**Tutorial Classes: Nil**	**Practical Classes: Nil**				**Total Classes: 45**		
Prerequisite: Python Programming								

I. COURSE OVERVIEW:

Computer science depends up on the science of mathematics, in order to acquire the knowledge in computing, mathematical ideas are required. Course is to provide a clear understanding of the concepts that underlying fundamentals with emphasis on their applications to computer science. It highlights mathematical definitions and proofs as well as applicable methods. The contents include formal logic notation, proof methods; induction, well-ordering; sets, relations; growth of functions; permutations and combinations, counting principles, recurrence equations.

II. COURSES OBJECTIVES:

The students will try to learn

I. The fundamental knowledge of statement notations and logical connectives which are used to convert English sentences into logical expressions.
II. The effective use of combinatory principles for calculating probabilities and solving counting problems
III. Relate practical examples to the functions and relations and interpret the associated operations and terminology used in the context
IV. The characteristics of generating functions for finding the solution of linear homogeneous recurrence relations

III. COURSE OUTCOMES:

At the end of the course students should be able to:

CO1 Make use of Number system and converting Decimal to binary, octal and hexadecimal and also gray code to binary, Binary to gray code..
CO2 Demonstrate notations for reformulating statements in formal logic and validating normal forms.
CO3 Demonstrate operations on discrete mathematical structures like sets, functions, lattices for representing the relations among them.
CO4 Illustrate rings, integral domains, and field structures with binary operations defined on them. .
CO5 Apply addition rule and substitution rule for solving the problems of combinatory
CO6 Develop solutions for recurrence relations and generating functions to obtain terms of equations.

IV. COURSE CONTENT:

MODULE – I: NUMBER SYSYTEM (10)

Number Systems: Basics, Numbers in base 10, The Binary System, Calculating the system, Octal number system, Hexa Decimal number system, Converting Decimal to Binary, Octal and Hexadecimal System. Gray code, Converting Gray code to Binary and Binary to Gray code.

MODULE – II: MATHEMATICAL LOGIC (10)

Propositional logic and Predicate Calculus: Statements and Notations, Connectives, Truth Tables, Tautologies, Equivalence of Formulas, Tautological Implications, Normal Forms, Theory of Inference for Statement Calculus, Consistency of Premises, Indirect Method of Proof, Predicative Logic, Statement Functions,

MODULE – III: RELATIONS, FUNCTIONS AND LATTICES (10)

Introduction to Sets, representation of Sets, Operation on Sets, Properties of Binary Relations, Relation Matrix, Operations on Relations, Transitive Closure, Equivalence Relation.

Compatibility and Partial Ordering Relations, Hasse Diagrams, Lattices: LUB, GLB. Functions: Bijective Functions, Composition of Functions, Inverse Functions,

MODULE – IV: ALGEBRAIC STRUCTURES AND COMBINATORICS (09)

Algebraic structures: Algebraic systems, examples and general properties, semi groups and monoids, groups, sub groups, homomorphism, isomorphism, rings.

Combinatory: The fundamental counting principles, permutations, disarrangements, combinations, permutations and combinations with repetitions, the binomial theorem, multinomial theorem, generalized inclusion exclusion principle.

MODULE – V: RECURRENCE RELATION (09)

Recurrence relation: Generating functions, function of sequences calculating coefficient of generating function, recurrence relations, solving recurrence relation by substitution and generating functions, Characteristics roots solution of homogeneous recurrence relation.

V. TEXT BOOKS:

1. J. P. Tremblay, R. Manohar, "Discrete Mathematical Structures with Applications to Computer Science", Tata McGraw Hill, India, 1st edition, 1997.
2. JoeL. Mott, Abraham Kandel, Theodore P. Baker, "Discrete Mathematics for Computer Scientists and Mathematicians", Prentice Hall of India Learning Private Limited, New Delhi, India, 2nd edition, 2010.

VI. REFERENCE BOOKS:

1. Kenneth H. Rosen, "Discrete Mathematics and Its Applications", Tata Mcgraw-Hill, New Delhi, India, 6th edition, 2012.
2. C. L. Liu, D. P. Mohapatra, "Elements of Discrete Mathematics", Tata Mcgraw-Hill, India, 3rd edition, 2008.
3. Ralph P. Grimaldi, B. V. Ramana, "Discrete and Combinatorial Mathematics - An Applied Introduction", Pearson Education, India, 5th edition, 2011.
4. D. S. Malik, M. K. Sen, "Discrete Mathematical Structures: Theory and Applications", Thomson Course Technology, India, 1st edition, 2004.

VII. ELECTRONIC RESOURCES:

1. https://swayam.gov.in/explorer?searchText=Discrete+Mathematical+Structures
2. https://www.javatpoint.com/discrete-mathematics-tutorial.
3. http://www.web.stanford.edu/class/cs103x
4. http://www.cs.odu.edu/~cs381/cs381content/web_course.html
5. http://www.cse.iitd.ernet.in/~bagchi/courses/discrete-book
6. http://www.nptel.ac.in/courses/106106094/
7. http://www.tutorialspoint.com/discrete_mathematics
8. http://www.dmtcs.org/dmtcs-ojs/index.php/dmtcs.

VIII. MATERIALS ONLINE

1. Course template
2. Tutorial question bank
3. Tech-talk topics
4. Open-ended experiments
5. Definitions and terminology
6. Assignments
7. Model question paper – I
8. Model question paper – II
9. Lecture notes
10. PowerPoint presentation
11. E-Learning Readiness Videos (ELRV)

COURSE CONTENT

DATA STRUCTURES LABORATORY								
III Semester: AE / ME / CE / ECE / EEE / CSE / CSE (AI & ML) / CSE (DS) / CSE (CS) / IT								
Course Code	**Category**	**Hours / Week**			**Credits**	**Maximum Marks**		
ACSD11	**Core**	**L**	**T**	**P**	**C**	**CIA**	**SEE**	**Total**
		-	-	2	1	40	60	100
Contact Classes: Nil	**Tutorial Classes: Nil**	**Practical Classes: 45**				**Total Classes: 45**		
Prerequisite: Essentials of Problem Solving								

I. COURSE OVERVIEW:

The course covers some of the general-purpose data structures and algorithms, and software development. Topics covered include managing complexity, analysis, static data structures, dynamic data structures and hashing mechanisms. The main objective of the course is to teach the students how to select and design data structures and algorithms that are appropriate for problems that they might encounter in real life. This course reaches to student by power point presentations, lecture notes, and lab which involve the problem solving in mathematical and engineering areas.

II. COURSES OBJECTIVES:

The students will try to learn

I. To provide students with skills needed to understand and analyze performance trade-offs of different algorithms / implementations and asymptotic analysis of their running time and memory usage.
II. To provide knowledge of basic abstract data types (ADT) and associated algorithms: stacks, queues, lists, tree, graphs, hashing and sorting, selection and searching.
III. The fundamentals of how to store, retrieve, and process data efficiently.
IV. To provide practice by specifying and implementing these data structures and algorithms in Python.
V. Understand essential for future programming and software engineering courses.

III. COURSE OUTCOMES:

At the end of the course students should be able to:

CO 1 Interpret the complexity of algorithm using the asymptotic notations.
CO 2 Select appropriate searching and sorting technique for a given problem.
CO 3 Construct programs on performing operations on linear and nonlinear data structures for organization ofa data.
CO 4 Make use of linear data structures and nonlinear data structures solving real time applications.
CO 5 Describe hashing techniques and collision resolution methods for efficiently accessing data with respectto performance.
CO 6 Compare various types of data structures; in terms of implementation, operations and performance.

IV. LIST OF EXPERIMENTS:

WEEK-1: GETTING STARTED EXERCISES

a. Recursively Remove all Adjacent Duplicates
b. Product of Two Numbers using Recursion
c. Binary to Gray Code using Recursion
d. Fibonacci Series in Reverse Order using Recursion

WEEK-2: SEARCHING TECHNIQUES

Write Python programs for implementing the following searching techniques.
a. Linear search.
b. Binary search.
c. Uniform Binary Search
d. Interpolation Search
e. Fibonacci search.

WEEK-3: SORTING TECHNIQUES

Write Python programs for implementing the following sorting techniques to arrange a list of integers in ascending order.

a. Bubble sort.
b. Insertion sort
c. Selection sort.

WEEK-4: SORTING TECHNIQUES

Write Python programs for implementing the following sorting techniques to arrange a list of integers in ascending order.

a. Quick sort.
b. Merge sort
c. Heap sort
d. Radix sort
e. Shell sort

WEEK-5: IMPLEMENTATION OF STACK

Write Python programsto

a. Design and implementation Stack and its operations using Arrays.
b. Uses Stack operations to convert infix expression into postfix expression.
c. Uses Stack operations for evaluating the postfix expression
d. Implementation of reversing a stack

WEEK-6: IMPLEMENTATION OF QUEUE

Write Python programs for the following:

a. Design and implementation Queue and its operations using Arrays
b. Implementation of Queue using Stack
c. Implementation of Circular Queue
d. Implementation of Double Ended Queue

WEEK-7: IMPLEMENTATION OF SINGLE LINKED LIST

Write Python programs for the following:

a. Uses functions to perform the following operations on single linked list.
   (i) Creation (ii) insertion (iii) deletion (iv) traversal
b. To store a polynomial expression in memory using linked list
c. Find middle element of a single linked list

WEEK-8: IMPLEMENTATION OF CIRCULAR SINGLE LINKED LIST

Write Python programs for the following:

Uses functions to perform the following operations on Circular linked list.

(i) Creation (ii) insertion (iii) deletion (iv) traversal

WEEK-9: IMPLEMENTATION OF DOUBLE LINKED LIST

Write Python programs for the following:

a. Uses functionsto perform the following operations on double linked list.
   (i) Creation (ii) insertion (iii) deletion (iv) traversal in both ways.
b. Implementation to delete all occurrences of a given key

WEEK-10: IMPLEMENTATION OF STACK, QUEUE USING LINKED LIST

a. Write Python programs to implement stack using linked list.
b. Write Python programs to implement queue using linked list

WEEK-11: IMPLEMENTATION OF AVL TREES

a. Insertion
b. Deletion
c. Count greater nodes in AVL trees

WEEK-12: GRAPH TRAVERSAL TECHNIQUES

Write Python programs to implement the following graph traversal algorithms:

a. Depth first search.
b. Breadth firstsearch.

WEEK-13: IMPLEMENTATION OF BINARY TREE

Write a Python program that uses functionsto perform the following:
a. Create a binary tree.
b. Insert, delete a node in a binary tree

WEEK-14: IMPLEMENTATION OF BINARY SEARCH TREE

Write a Python program that uses functionsto perform the following:
c. Create a binary search tree.
d. Traverse the above binary search tree recursively in pre-order, post-order, and in-order.
e. Count the number of nodes in the binary search tree.

V. TEXT BOOKS:

1. Yashavant Kanetkar, Aditya Kanetkar, "Let us Python", BPB publication, 1st edition, 2019.
2. Ashok Kamthane, Amit Kamthane, "Programming and Problem Solving with Python", McGraw Hill Education (India) Private Limited, 2018.

VI. REFERENCE BOOKS:

1. Taneja Sheetal, Kumar Naveen, "Python Programming – A Modular Approach", Pearson, 2017.
2. Michael H Goldwasser, David Letscher, "Object Oriented Programming in Python", Prentice Hall, 1st edition, 2007.

VII. ELECTRONICS RESOURCES:

1. https://python-textbok.readthedocs.io/en/1.0/Object_Oriented_Programming.html
2. https://www.programiz.com/python-programming/

VIII. MATERIALS ONLINE

1. Course template
2. Lab Manual

COURSE CONTENT

OPERATING SYSTEMS LABORATORY								
III Semester: CSE / CSE (CS) / IT								
Course Code	**Category**	**Hours / Week**			**Credits**	**Maximum Marks**		
ACSD10	**Core**	**L**	**T**	**P**	**C**	**CIA**	**SEE**	**Total**
		0	0	2	1	40	60	100
Contact Classes: Nil	**Tutorial Classes: Nil**	**Practical Classes: 45**				**Total Classes: 45**		
Prerequisites: **There are no prerequisites to take this course.**								

I. COURSE OVERVIEW:

The course covers some of the design aspects of operating system concepts. Topics covered include process scheduling, memory management, deadlocks, disk scheduling strategies, and file allocation methods. The main objective of the course is to teach the students how to select and design algorithms that are appropriate for problems that they might encounter in real life.

II. COURSE OBJECTIVES

The students will try to learn:

I. The functionalities of main components in operating systems and analyze the algorithms used in process management.
II. Algorithms used in memory management and I/O management
III. Different methods for preventing or avoiding deadlocks and File systems.

III. COURSE OUTCOMES:

At the end of the course students should be able to:

CO1 Acquire knowledge of the operating system structure and process
CO2 Analyze the performance of process scheduling algorithms
CO3 Evaluate the process memory requirement and its fragmentation.
CO4 Analyze the safe state and deadlock mechanism
CO5 Analyze the performance of the disk scheduling algorithms
CO6 Ability to simulate file structures and allocation methods

IV. COURSE CONTENT:

Week – 1: CPU SCHEDULING ALGORITHMS

Simulate the following non-preemptive CPU scheduling algorithms and evaluate the performance by choosingcorresponding metrics.

b. FCFS.
c. SJF.
d. Round Robin (pre-emptive)
e. Priority

Week – 2: MULTI-LEVEL QUEUE SCHEDULING ALGORITHM

Simulate multi-level queue scheduling algorithm considering the following scenario. All the processes in the system are divided into two categories – system processes and user processes. System processes are to be givenhigher priority than user processes. Use FCFS scheduling for the processes in each queue.

Week – 3: FILE ALLOCATION STRATEGIES

Simulate the following file allocation strategies

a) Sequential

b) Indexed
c) Linked

Week – 4: MEMORY MANAGEMENT TECHNIQUES
Simulate the MVT and MFT memory management techniques.

Week – 5: MEMORY MANAGEMENT TECHNIQUES
Simulate the following contiguous memory allocation techniques

a) Worst-fit
b) Best-fit
c) First-fit

Week – 6: MEMORY MANAGEMENT TECHNIQUE
Simulate paging technique of memory management

Week – 7: FILE ORGANIZATION TECHNIQUES
Simulate the following file organization techniques

a) Single level directory
b) Two level directory
c) Hierarchical

Week – 8: DEADLOCK MANAGEMENT
Conversion of resource allocation graph (RAG) to wait for graph (WFG) for each type of method used for storing graph.

Week – 9: DEADLOCK MANAGEMENT TECHNIQUES
Simulate Bankers algorithm for the purpose of deadlock avoidance

Week – 10: DISK SCHEDULING ALGORITHMS
Simulate disk scheduling algorithms
a) FCFS b) SCAN c) C-SCAN

Week – 11: PAGE REPLACEMENT ALGORITHMS
Simulate page replacement algorithms
a) FIFO b) LRU c) LFU
.

Week – 12: PAGE REPLACEMENT ALGORITHMS
Simulate Optimal page replacement algorithm.

Week – 13: PROCESS SYNCHRONIZATION
Simulate producer-consumer problem using semaphores

Week – 14: PROCESS SYNCHRONIZATION
Implement Reader- Writer problem using semaphore

V.TEXT BOOKS:

1. Abraham Silberschatz,Peter Galvin and Gagne, "Operating System Concepts", Addison Wesley, 6th edition, 2002.
2. Harvey M.Deitel, "Operating System", Addison Wesley, 2nd edition 2000.

VII. ELECTRONICS RESOURCES

1. https://cs.sdsu.edu/master-exams/operating-systems-architecture/

VIII. MATERIALS ONLINE

1. Course template
2. Lab Manual

COURSE CONTENT

PROGRAMMING WITH OBJECTS LABORATORY								
III Semester: CSE / CSE (AI & ML) / CSE (DS) / CSE (CS) / IT								
Course Code	**Category**	**Hours / Week**			**Credits**	**Maximum Marks**		
AITD02	**Core**	**L**	**T**	**P**	**C**	**CIA**	**SEE**	**Total**
		-	-	2	1	40	60	100
Contact Classes: Nil	**Tutorial Classes: Nil**	**Practical Classes: 45**				**Total Classes: 45**		
Prerequisite: Essentials of Problem Solving								

I. COURSE OVERVIEW:

The course covers some of the general-purpose data structures and algorithms, and software development. Topics covered include managing complexity, analysis, static data structures, dynamic data structures and hashing mechanisms. The main objective of the course is to teach the students how to select and design data structures andalgorithms that are appropriate for problems that they might encounter in real life. This course reaches to studentby power point presentations, lecture notes, and lab which involve the problem solving in mathematical and engineering areas.

II. COURSE OBJECTIVES:

The students will try to learn

I. The basic concepts of object oriented programming.
II. The application of object oriented features for developing flexible and extensible applications.
III. The Graphical User Interface (GUI) with database connectivity to develop web applications.

III. COURSE OUTCOMES:

At the end of the course students should be able to:

CO 1 Demonstrate object oriented programming concepts that helps to organize complex problem solving.
CO 2 Make use of the programming constructs like control Structures, arrays, parameter passing techniques and constructors to solve the real time problems.
CO 3 Utilize the abstraction, encapsulation and polymorphism Techniques to solve different complex problems
CO 4 Experiment all threading and thread synchronization problems in soft real time systems
CO 5 Make use of inheritance, interfaces, packages and files to implement reusability in soft real time systems
CO 6 Construct GUI based applications along with Exception handling using AWT, Swings and JDBC connectivity

IV. COURSE CONTENT:

WEEK – 1: BASIC PROGRAMS

a. Try debug step by step with small program of about 10 to 15 lines which contains at least one if else condition and a for loop.
b. Write a java program that prints all real solutions to the quadratic equation ax2+bx+c=0. Read in a, b, c and use the quadratic formula.
c. The Fibonacci sequence is defined by the following rule. The first two values in the sequence are 1 and every subsequent value is the sum of the two values preceding it. Write a java program that uses both recursive and non- recursive functions

WEEK – 2: MATRICES, OVERLOADING, OVERRIDING

a.Write a java program to multiply two given matrices.
b.Write a java program to implement method overloading and constructors overloading.
c.Write a java program to implement method overriding.

WEEK – 3: PALINDROME, ABSTRACT CLASS

a.Write a java program to check whether a given string is palindrome.
b.Write a java program for sorting a given list of names in ascending order.
c.Write a java program to create an abstract class named Shape that contains two integers and an empty method named print Area (). Provide three classes named Rectangle, Triangle and Circle such that each one of the classes extends the class Shape. Each one of the classes contains only the method print Area () that prints the area of the given shape.

WEEK – 4: INTERFACE

Write a program that creates a user interface to perform integer division. The user enters two numbers in the text fields, Num1 and Num2. The division of Num1 and Num2 is displayed in the Result field when the Divide button is clicked. If Num1 and Num2 were not integers, the program would throw a Number Format Exception. If Num2 were zero, the program would throw an Arithmetic Exception Display the exception in a message dialog box.

WEEK – 5: MUTITHREADING

a.Write a program to synchronize the threads acting on the same object. [Consider the example of any reservations like railway, bus, movie ticket booking, etc.]
b.Write a java program that correct implements of producer consumer program.

WEEK – 6: FILES

a.Write a java program that reads a file name from the user, and then displays information about whether the file exists, whether the file is readable, whether the file is writable, the type of file and the length of the file in bytes.
b.Write a java program that displays the number of characters, lines and words in a text file.
c.Write a java program that reads a file and displays the file on the screen with line number before each line.

WEEK – 7: FILES

a.Suppose that table named table.txt is stored in a text file. The first line in the file is the header, and the remaining lines correspond to rows in the table. The elements are separated by commas. Write a java program to display the table using labels in gridlayout.

b.Write a java program that connects to a database using JDBC and does add, delete, modify and retrieve operations.

WEEK – 8: JAVA PROGRAMMING WITH DATABASE

a.Write a java program that loads names and phone numbers from a text file where the data is organized as one line per record and each field in a record are separated by a tab (/t). It takes a name or phone number as input and prints the corresponding other value from the hash table. Hint: Use hash tables.
b.Implement the above program with database instead of a text file.
c. Write a program to perform CRUD operations on the student table in a database using JDBC

WEEK – 9: EXCEPTION HANDLING

a.Write a java program to handle checked and unchecked exceptions.

b.Write a java program to create user defined exceptions.

WEEK – 10: TRAFFIC LIGHT

Write a java program that simulates a traffic light. The program lets the user select one of three lights: Red, Yellow or Green with radio buttons. On selecting a button an appropriate message with ―STOP or ―READY‖ or ‖GO‖ should appear above the buttons in selected color. Initially, there is no message shown

WEEK – 11: MOUSE EVENTS

a.Write a java program that handles all mouse events and shows the event name at the center of the window when a mouse event is fired. Use adapter classes.

b.Write a java program to demonstrate the key event handlers.

WEEK – 12: CALCULATOR

Write a java program that works as a simple calculator. Use a grid layout to arrange buttons for the digits and for the +,-,*, % operations. Add a text field to display the result. Handle any possible exception like divided by zero

WEEK – 13: APPLET

a.Develop an applet that displays a simple message.

b.Develop an applet that receives an integer in one text field and computes its factorial value and returns it in another text field, when the button named ―compute is clicked.

WEEK – 14: SWING

a. Write Java programs to develop swing application using JList, JTree, and Jtable.

b. Write Java programs to develop swing application using JTabbedPane and JScrollPane.

V. TEXT BOOKS:

1. Schildt, Herbert, "Java: The Complete Reference", McGraw-Hill Education, 11th edition, 2018.
2. Deitel, Paul and Deitel, Harvey. Java: How to Program, Pearson, 11th edition, 2018.

VI. REFERENCE BOOK

1. Evans, Benjamin J. and Flanagan, David. Java in a Nutshell, O'Reilly Media, 7th edition, 2018.
2. Bloch, Joshua. Effective Java, Addison-Wesley Professional, 3rd edition, 2017.
3. Sierra, Kathy and Bates, Bert. Head First Java, O'Reilly Media, 2nd edition, 2005.
4. Farrell, Joyce.Java Programming, Cengage Learning B S Publishers, 8th edition, 2020.

VII. ELECTRONICS RESOURCES

1. https://docs.oracle.com/en/java/
2. https://www.geeksforgeeks.org/java
3. https://www.tutorialspoint.com/java/index.htm
4. https://www.coursera.org/courses?query=java

VIII. MATERIALS ONLINE

1. Course template
2. Lab manual

EXPERIENTIAL ENGINEERING EDUCATION (EXEED) – PROTOTYPE / DESIGN BUILDING

III Semester: AE / ME / CE / ECE / EEE / CSE / CSE (AI & ML) / CSE (DS) / CSE (CS) / IT								
Course Code	Category	Hours / Week			Credits	Maximum Marks		
ACSD12	Skill	L	T	P	C	CIA	SEE	Total
		0	0	2	1	40	60	100
Contact Classes: NIL	Tutorial Classes: NIL	Practical Classes:45				Total Classes: 45		
Prerequisite: Essentials of Innovation.								

I. COURSE OVERVIEW:

This course provides an overall exposure to the various methods and tools of prototyping. This course discusses Low- Fidelity, paper, wireframing and tool-based prototyping techniques along with design principles and patterns.

II. COURSES OBJECTIVES:

The students will try to learn

I. The basic principles and design aspect of prototyping.
II. The various techniques, design guidelines and patterns.
III. The applications of prototyping using various tools and platforms.

III. SYLLABUS:

WEEK 1: An Introduction to Prototyping

WEEK 2: Low - Fidelity Prototyping and Paper Prototyping

WEEK 3: Wireframing And Tool Based Prototyping

WEEK 4: Physical Low- Fidelity Prototyping

WEEK 5: Tool Based Prototyping

WEEK 6: Design Principles and Patterns- Graphic Design

WEEK 7: Design Principles and Patterns- Interaction Design

WEEK 8: Commercial Design Guidelines and Standards

WEEK 9: Universal Design: Sensory and Cognitive Impairments

WEEK 10: Universal Design: Tools, Limitations and Standards

WEEK 11: Introduction Platforms and Context : Mobile Ui Design, Wearable

WEEK 12: Introduction Platforms and Context : Automotive User Interface

WEEK 13: Introduction Platforms and Context : Iot and Physical Computing

WEEK 14: Assessment

COURSE CONTENT

DESIGN AND ANALYSIS OF ALGORITHMS								
IV Semester: CSE / CSE (AI & ML) / CSE (DS) / CSE (CS) / IT								
Course Code	**Category**	**Hours / Week**			**Credits**	**Maximum Marks**		
		L	**T**	**P**	**C**	**CIA**	**SEE**	**Total**
ACSD13	**Core**	3	0	0	3	40	60	100
Contact Classes: 48	**Tutorial Classes: Nil**	**Practical Classes: Nil**				**Total Classes: 48**		
Prerequisite: Programming for Problem Solving, Data Structures								

I. COURSE OVERVIEW:

Design and analysis of algorithms is the process of finding the computational complexity of algorithms. It helps to design and analyze the logic on how the algorithm will work before developing the actual code for a program. It focuses on introduction to algorithm, asymptotic complexity; sorting and searching using divide and conquer, greedy method, dynamic programming, backtracking, branch and bound. NP-hard and NP-complete problems. The applications of algorithm design are used for information storage, retrieval, transportation through networks, and presentation to users.

II. COURSES OBJECTIVES:

The students will try to learn

I. Mathematical approach for Analysis of Algorithms.
II. Methods and techniques for analyzing the correctness and resource requirements of algorithms.
III. Different paradigms of algorithm design including recursive algorithms, divide-and-conquer algorithms, dynamic programming, greedy algorithms, Backtracking, Branch and Bound and graph algorithms.
IV. Strategies for solving problems not solvable in polynomial time.

III. COURSE OUTCOMES:

At the end of the course students should be able to:

CO1 Find the (worst case, randomized, amortized) running time and space complexity of given algorithms using techniques such as recurrences and properties of probability.
CO2 Apply divide and conquer algorithms for solving sorting, searching and matrix multiplication.
CO3 Make Use of appropriate tree traversal techniques for finding shortest path.
CO4 Compare Identify suitable problem solving techniques for a given problem and finding optimized solutions using Greedy and Dynamic Programming techniques
CO5 Apply greedy algorithm Utilize backtracking and branch and bound techniques to deal with traceable and in-traceable problems.
CO6 Apply Describe the classes P, NP, NP-Hard, and NP- complete for solving deterministic and non-deterministic problems.

IV. COURSE CONTENT:

MODULE – I: INTRODUCTION (10)

Algorithm: Pseudo code for expressing algorithms; Performance analysis: Space complexity, time complexity; Asymptotic notations: Big O notation, omega notation, theta notation and little o notation, amortized complexity; Divide and Conquer: General method, binary search, quick sort, merge sort, Stassen's matrix multiplication.

MODULE – II: SEARCHING AND TRAVERSAL TECHNIQUES (09)

Disjoint set operations, union and find algorithms; Efficient non recursive binary tree traversal algorithms, spanning trees; Graph traversals: Breadth first search, depth first search, connected components, biconnected components.

MODULE – III: GREEDY METHOD AND DYNAMIC PROGRAMMING (10)

Greedy method: The general method, job sequencing with deadlines, knapsack problem, minimum cost spanning trees,single source shortest paths.

Dynamic programming: The general method, matrix chain multiplication optimal binary search trees, 0/1 knapsack

problem, single source shortest paths, all pairs shortest paths problem, the travelling salesperson problem.

MODULE – IV: BACKTRACKING AND BRANCH AND BOUND (09)

Backtracking: The general method, the 8 queens problem, sum of subsets problem, graph coloring, Hamiltonian cycles; Branch and bound: The general method, 0/1 knapsack problem, least cost branch and bound solution, first in first out branch and bound solution, travelling salesperson problem.

MODULE – V: NP-HARD AND NP-COMPLETE PROBLEMS (09)

Basic concepts: Non-deterministic algorithms, the classes NP - Hard and NP, NP Hard problems, clique decisionproblem, chromatic number decision problem, Cook's theorem.

V. TEXT BOOKS:

1. Ellis Horowitz, Satraj Sahni, Sanguthevar Rajasekharan, "Fundamentals of Computer Algorithms", Universities Press, 2nd edition, 2015.
2. Alfred V. Aho, John E. Hopcroft, Jeffrey D, "The Design And Analysis Of Computer Algorithms", Pearson India, 1st edition, 2013..

VI. REFERENCE BOOKS:

1. Levitin A, "Introduction to the Design and Analysis of Algorithms", Pearson Education, 3rd edition, 2012.
2. Goodrich, M. T. R Tamassia, "Algorithm Design Foundations Analysis and Internet Examples", John Wileyn and Sons, 1st edition, 2001.
3. Base Sara Allen Vangelder, "Computer Algorithms Introduction to Design and Analysis", Pearson, 3rd edition, 1999.

VII. ELECTRONICS RESOURCES:

1. http://www.personal.kent.edu/~rmuhamma/Algorithms/algorithm.html
2. http://openclassroom.stanford.edu/MainFolder/CoursePage.php?course=IntroToAlgorithms
3. http://www.facweb.iitkgp.ernet.in/~sourav/daa.html

VIII. MATERIALS ONLINE

1. Course template
2. Tutorial question bank
3. Tech-talk topics
4. Open-ended experiments
5. Definitions and terminology
6. Assignments
7. Model question paper – I
8. Model question paper – II
9. Lecture notes
10. PowerPoint presentation
11. E-Learning Readiness Videos (ELRV)

COURSE CONTENT

DATABASE MANAGEMENT SYSTEMS								
IV Semester: CSE /IT / CSE (AI&ML) / CSE (DS) / CSE (CS)								
Course Code	**Category**	**Hours / Week**			**Credits**	**Maximum Marks**		
AITD03	**Core**	**L**	**T**	**P**	**C**	**CIA**	**SEE**	**Total**
		3	0	0	3	40	60	100
Contact Classes: 45	**Tutorial Classes: Nil**	**Practical Classes: Nil**				**Total Classes: 45**		
Prerequisite: Programming for Problem Solving, Data Structures								

I. COURSE OVERVIEW:

The purpose of this course is to provide a clear understanding of fundamentals with emphasis on their applications to create and manage large data sets. It highlights on technical overview of database software to retrieve data from n database. The course includes database design principles, normalization, concurrent transaction processing,, security, recovery and file Organization techniques.

II. COURSES OBJECTIVES:

The students will try to learn

I. The role of database management system in an organization and learn the data base concepts.
II. The design of databases using data modeling and Logical database design techniques.
III. The database queries using relational algebra and calculus and SQL.
IV. The concept of a database transaction and related concurrent, recovery facilities and evaluate a set of queries in query processing.

III. COURSE OUTCOMES:

At the end of the course students should be able to:

CO1 Describe data models, schemas, instances, view levels and database architecture for voluminous data storage.
CO2 Define the concept of Relational Algebra and Relational Calculus from set theory to represent queries.
CO3 Make Use of SQL queries for data aggregation, calculations, views, sub-queries, embedded queries manipulation.
CO4 Illustrate the definition of Functional Dependencies, Inference rules and minimal sets of FD's to maintain data integrity.
CO5 State the concepts of transaction, states and ACID properties in data manipulation.
CO6 Apply indexing, hashing techniques to access the records from the file effectively.

IV. COURSE CONTENT:

MODULE–I:CONCEPTUALMODELINGINTRODUCTION (10)

Introduction to Databases: Purpose of Database systems, view of data, data models, Database languages, Database users, various components of overall DBS architecture, various concepts of ER model, basics of Relational Model.

MODULE–II:RELATIONALAPPROACH (09)

Relational algebra and calculus: Relational algebra, selection and projection, set operations, renaming, joins, division, examples of algebra queries, relational calculus: Tuple relational calculus, Domain relational calculus, expressive power of algebra and calculus.

MODULE–III:SQLQUERY-BASICS,RDBMS- NORMALIZATION (10)

SQL – Data Definition commands, Queries with various options, Mata manipulation commands, Views, Joins, views, integrity and security, triggers and cursors;

Relational database design: Pitfalls of RDBD, Lossless join decomposition, functional dependencies, Armstrong axioms, normalization for relationaldatabases1st, 2nd and 3rd normal forms, Basic definitions of MVDs and JDs, 4th and 5th normal forms.

MODULE–IV:TRANSACTIONMANAGEMENT (09)
Transaction processing: Transaction concept, transaction State, implementation of atomicity and durability, concurrent executions, serializability, recoverability.

ConcurrencyControl: Lock-basedprotocols, timestamp-basedprotocols, validation-based protocols, multiple granularity, multiversion schemes, deadlock handling.
Recovery: Failure classification, storage structure, recovery and atomicity, Log-Based recovery, shadow paging, recovery with concurrent transactions buffer management.

MODULE–V:DATASTORAGEANDQUERYPROCESSING (10)
Data storage: Overview of physical storage media, magnetic disks, storage access, file organization, organization of records in files.

Indexing and Hashing: Basic concepts: Ordered indices, B+ tree index files, B-tree index files, static hashing, Dynamic Hashing, Comparison of Ordered Indexing and Hashing.
Query Processing: Overview, measures of query cost.

V. TEXT BOOKS:

1. Abraham Silberschatz, HenryF.Korth,S.Sudarshan,"DatabaseSystemConcepts",McGraw-Hill, 6th Edition, 2017.

VI. REFERENCE BOOKS:

1. Ramez Elmasri, Shamkant, B. Navathe, “Database Systems”, Pearson Education, 6th edition, 2013.
2. Peter Rob, Carles Coronel, “Database System Concepts”, Cengage Learning, 7th edition, 2008.

VII. ELECTRONICS RESOURCES:

1. https://www.youtube.com/results?search_query=DBMS+onluine+classes
2. http://www.w3schools.in/dbms/
3. http://beginnersbook.com/2015/04/dbms-tutorial/

VIII. MATERIALS ONLINE

1. Course template
2. Tutorial question bank
3. Tech-talk topics
4. Open-ended experiments
5. Definitions and terminology
6. Assignments
7. Model question paper – I
8. Model question paper – II
9. Lecture notes
10. PowerPoint presentation
11. E-Learning Readiness Videos (ELRV)

INSTITUTE OF AERONAUTICAL ENGINEERING

(Autonomous)

Dundigal - 500 043, Hyderabad, Telangana

COURSE CONTENT

COMPUTER NETWORKS								
II Semester: CSE / CSE (AI & ML) / CSE (CS) / IT								
Course Code	**Category**	**Hours / Week**			**Credits**	**Maximum Marks**		
		L	**T**	**P**	**C**	**CIA**	**SEE**	**Total**
AITD04	Core	3	0	0	3	40	60	100
Contact Classes: 48	**Tutorial Classes: Nil**	**Practical Classes: Nil**				**Total Classes: 48**		
Prerequisite: There is no prerequisite to take this course								

I. COURSE OVERVIEW:

The main emphasis of this course is on the organization and management of local area networks (LANs) wide area networks (WANs). The course includes learning about computer network organization and implementation, obtaining a theoretical understanding of data communication and computer networks. Topics include layered network architectures, addressing, naming, forwarding, routing, communication reliability, the client-server model, and web and email protocols. The applications of this course are to design, implement and maintain basic computer networks.

II. COURSES OBJECTIVES:

The students will try to learn

I. The fundamental concepts of computer networking, different types of topologies, and protocols
II. Error correction and detection examples and applications in data link layer and uses of other media access control.
III. The data transmission through protocols across the network in wired and wireless using routing algorithms.

III. COURSE OUTCOMES:

At the end of the course students should be able to:

CO1 Outline the basic concepts of data communications including the key aspects of networking and their interrelationship, packet, circuit and cell switching as internal and external operations, physical structures, types, models, and internetworking

CO2 Make use of different types of bit errors and the concept of bit redundancy for error detection and error correction.

CO3 Identify the suitable design parameters and algorithms for assuring quality of service and internetworking in various internet protocols.

CO4 Interpret transport protocols (TCP, UDP) for measuring the network performance

CO5 Illustrate the various protocols (FTP, SMTP, TELNET, EMAIL, and WWW) and standards (DNS) in data communications among networks.

CO6 Compare various networking models (OSI, TCP/IP) in terms of design parameters and communication modes.

IV. COURSE CONTENT:

MODULE –I: INTRODUCTION (09)

Introduction: Networks, network types, internet history, standards and administration; Network models: Protocol layering, TCP/IP protocol suite, the OSI model Transmission media: Introduction, guided media, unguided media; Switching: Introduction, circuit switched networks, packet switching.

MODULE –II: DATA LINK LAYER (10)

Introduction: Link layer addressing; Error detection and correction: Cyclic codes, checksum, forward error correction; Data link control: DLC services, data link layer protocols, media access control: Random access, virtual LAN.

MODULE –III: NETWORK LAYER (10)
Network layer design issues, routing algorithms, congestion control algorithms, quality of service, and internetworking.

The network layer on the internet: IPv4 addresses, IPv6, internet control protocols, OSPF (Open Shortest Path First), IP(Internet Protocol).

MODULE –IV: TRANSPORT LAYER (10)
The transport service, elements of transport protocols, congestion control; The internet transport protocols: UDP (User Datagram Protocol), TCP (Transport Control Protocol), performance problems in computer networks, network
performance measurement.

MODULE-V: THE LINK LAYER LAYER and LANs (09)
Introduction to the link layer, services provided by the Link layer, DOCSIS-The Link layer protocol for cable internet access, Link virtualization, Multiprotocol label switching (MPLS),Data Centre networking.

V. TEXT BOOKS:

1. Behrouz A. Forouzan, "Data Communications and Networking with TCPIP Protocol Suite", Tata McGraw-Hill, 6th edition, 2022.
2. Andrew S. Tanenbaum, David.j.Wetherall, "Computer Networks", Prentice-Hall, 5th edition, 2010.

VI. REFERENCE BOOKS:

1. Douglas E. Comer, "Internetworking with TCP/IP ", Prentice-Hall, 5th edition, 2011.
2. Peterson, Davie, Elsevier, "Computer Networks", 5th edition, 2011.
3. Kurose, James F," Computer Networking": a top-down approach," : 7th edition. |Hoboken, New Jersey: Pearson, 2017.

VII. ELECTRONICS RESOURCES:

1. http://computer.howstuffworks.com/computer-networking-channel.htm
2. https://www.geeksforgeeks.org/layers-osi-model/
3. https://www.wikilectures.eu/w/Computer_Network
4. https://technet.microsoft.com/en-us/network/default.aspx

VIII. MATERIALS ONLINE

1. Course template
2. Tutorial question bank
3. Tech-talk topics
4. Open-ended experiments
5. Definitions and terminology
6. Assignments
7. Model question paper – I
8. Model question paper – II
9. Lecture notes
10. PowerPoint presentation
11. E-Learning Readiness Videos (ELRV)

INSTITUTE OF AERONAUTICAL ENGINEERING

(Autonomous)

Dundigal - 500 043, Hyderabad, Telangana

COURSE CONTENT

WEB SYSTEMS ENGINEERING								
IV Semester: CSE / IT / CSE (AI&ML) / CSE (DS)								
Course Code	**Category**	**Hours / Week**			**Credits**	**Maximum Marks**		
ACSD14	**Core**	**L**	**T**	**P**	**C**	**CIA**	**SEE**	**Total**
		3	0	0	3	40	60	100
Contact Classes: 45	**Tutorial Classes: Nil**	**Practical Classes: Nil**				**Total Classes: 45**		
Prerequisite: Object Oriented Programming								

I. COURSE OVERVIEW:

This course introduces students to create concurrently a web app and a native app (for Android and iOS) with React Native and React Native Web. It covers HTML for structuring and presenting content on the World Wide Web. CSS being used to format structured content. To create a dynamic and interactive experience for the user it covers JAVASCRIPT. To build the applications using React concepts such as JSX, REDUX and PHP.

II. COURSES OBJECTIVES:

The students will try to learn

I. The fundamentals of HTML and CSS to design static and dynamic web pages.
II. The concepts of client side programming with Bootstrap , JavaScript, Ajax , JSX.
III. The MVC architecture, about React and built single and multiple page applications using REACT with REDUX.
IV. The characteristics, systematic methods, model for developing web applications using PHP.

III. COURSE OUTCOMES:

At the end of the course students should be able to:

CO1 Summarize HTML elements and attributes for structuring and presenting content of webpage based on the user requirement.
CO2 Make use of CSS properties for formatting webpages.
CO3 Develop responsive webpage using Bootstrap for viewing web pages in various devices
CO4 Utilize the concepts of JS with event actions for displaying information on webpages.
CO5 Identify UI binding library elements for deploying a reusable complex UI React Redux.
CO6 Develop web applications with the help of React Redux framework and serverside scripting using PHP.

IV.COURSE CONTENT:

MODULE 1: INTRODUCTION TO WEB APPLICATION, HTML AND CSS (10)

Introduction to web application: Internet, Intranet, WWW, Static and Dynamic Web Page; Web Clients; Web Servers; Basics of HTML5 and web design, creating tables, lists, HTML forms. Styles and classes to your web pages, web page layouts with CSS, introduction to responsive web design with CSS3 and HTML5.

MODULE 2: BUILD INTERFCAES USING BOOTSTARP (09)

Introduction to web design from an evolutionary perspective, user interface design through bootstrap, containers, tables, jumbotrons, list, cards, carousal, navigation, modals, flex and forms, responsive web page design, basic UI grid structure.

MODULE 3: INTERACTIVE USER INFERFACE AND WEB APPLICATION DEVELOPMENT (10)

JavaScript variable naming rules, data types, expressions and operators, pattern matching with regular expressions, managing web page styles using JavaScript and CSS, script forms, introduction to AJAX.
Introduction to web design from an evolutionary perspective, create a native and web app, JSX, class and function components, props, state, lifecycle methods, and hooks.

MODULE 4: UI BINDING LIBRARY FOR REACT AND REDUX (09)

Introduction to client-side routing using React Router, global state management and transitions using REDUX, server -side rendering and testing using Jest. Web Development Using REACT is delivered both in a blended learning and self-paced mode.

REDUX store using the official create store function, REDUX toolkit has a configure store API, loading state for that particular API, adding an API service as a middleware, example uses create REACT App.

MODULE 5: INTRODUCTION TO PHP AND SERVER-SIDE SCRIPTING (10)

Introduction to PHP: Declaring variables, data types, arrays, strings, operations, expressions, control structures, functions, Reading data from web form controls like Text Boxes, radio buttons, lists etc., Handling File Uploads, Connecting to database (My SQL as reference), executing simple queries, handling results, Handling sessions and cookies.

File Handling in PHP: File operations like opening, closing, reading, writing, appending, deleting etc. on text and binary files, listing directories.

V. TEXT BOOKS:

1. Alok Ranjan Abhilasha Sinha, Ranjit Battewad, "JavaScript for Modern Web Development: Building a Web Application Using HTML, CSS, and JavaScript", 1st edition, 2020
2. Alex Banks and Eve Porcello, "Learning React: Functional Web Development with React and Redux", 2017.
3. Steven Holzner, "The Complete Reference PHP", Tata McGraw-Hill, 2017.

VI. REFERENCE BOOKS:

1. Adam Boduch and Roy Derks, "React and React Native: A complete hands-on guide to modern web and mobile development with React.js", 3rd edition, 2020.
2. W Hans Bergsten, "Java Server Pages", O'Reilly, 3rd edition, 2003
3. D.Flanagan, "Java Script", O'Reilly, 6th edition, 2011.
4. Jon Duckett, "Beginning Web Programming", WROX, 2nd edition, 2008.

VII. ELECTRONICS RESOURCES:

1. http://computer.howstuffworks.com/computer-networking-channel.htm
2. https://www.geeksforgeeks.org/layers-osi-model/
3. https://www.wikilectures.eu/w/Computer_Network
4. https://technet.microsoft.com/en-us/network/default.aspx

VIII. MATERIALS ONLINE

1. Course template
2. Tutorial question bank
3. Tech-talk topics
4. Open-ended experiments
5. Definitions and terminology
6. Assignments
7. Model question paper – I
8. Model question paper – II
9. Lecture notes
10. PowerPoint presentation
11. E-Learning Readiness Videos (ELRV)

COURSE CONTENT

OBJECT ORIENTED SOFTWARE ENGINEERING								
IV Semester: CSE / IT / CSE (CS)								
Course Code	**Category**	**Hours / Week**			**Credits**	**Maximum Marks**		
		L	**T**	**P**	**C**	**CIA**	**SEE**	**Total**
ACSD15	**Core**	3	0	0	3	40	60	100
Contact Classes: 48	**Tutorial Classes: Nil**	**Practical Classes: Nil**				**Total Classes: 48**		
Prerequisite: There is no prerequisite to take this course								

I. COURSE OVERVIEW:

This course concentrates on developing basic understanding about various activities that are involved in a software development. This course enables the student to develop necessary skills for developing a product or applications. The course focuses on all activities involved in software development (communication, planning, modelling, construction, deployment).In this course; students will gain a broad understanding of the discipline of software engineering and its application to the development and management of software systems. Student can implement and get knowledge about development of the software and gains knowledge of basic engineering methods and practices, and their appropriate application

II. COURSES OBJECTIVES:

The students will try to learn

I. The concepts of object-oriented programming in software design and development.
II. The different phases in software development life cycle.
III. The Design concepts in software development using unified modelling language.

III. COURSE OUTCOMES:

At the end of the course students should be able to:

CO1 Identify the appropriate process model approaches and techniques to manage a given software development process.
CO2 Summarize the software requirement specifications and the SRS documents.
CO3 Identify various modelling approaches for Object Oriented Analysis using UML.
CO4 Understand the importance and need of Design and explain the various approaches of Designs.
CO5 Explain various Testing Approaches and automation tools
CO6 Explain the importance of Software Maintenance and Reengineering process

IV. COURSE CONTENT:

MODULE –I: INTRODUCTION TO SOFTWARE ENGINEERING (09)

Introduction to software engineering, software development process models, agile development, project and process, project management, process and project metrics, object-oriented concepts, principles and methodologies.

MODULE –II: PLANNING AND SCHEDULING (10)

Software requirements specification, software prototyping, software project planning, scope, resources, software estimation, empirical estimation models, planning, risk management, software project scheduling, object-oriented estimation and scheduling.

MODULE –III: ANALYSIS (10)

Analysis modeling, data modeling, functional modeling and information flow, behavioral modeling, structured analysis, object-oriented analysis, domain analysis.

Object-oriented analysis process, object relationship model, object behaviour model, design modeling with UML.

MODULE –IV: DESIGN (09)

Design concepts and principles, design process, design concepts, modular design, design effective modularity, introduction to software architecture, data design, transform mapping, transaction mapping, object-oriented design, system design process, object design process.

MODULE –V: IMPLEMENTATION, TESTING AND MAINTENANCE (10)

Top-down, bottom-up, object-oriented product implementation and integration. Software testing methods, white box, basis path, control structure, black box, unit testing, integration testing, validation and system testing, testing tools, software maintenance and reengineering.

V. TEXT BOOKS:

1. Ivar Jacobson, "Object Oriented Software Engineering: A Use Case Driven Approach", Pearson India, 1st Edition, 2002.
2. Bernd Bruegge, Allen H. Dutoit, "Object-Oriented Software Engineering: Using UML, Patterns and Java", Pearson New International Edition, 3rd Edition, 2013.

VI. REFERENCE BOOKS:

1. Roger. S. Pressman and Bruce R. Maxim, "Software Engineering – A Practitioner's Approach", McGraw Hill, 7th Edition, 2015.
2. Ian Sommerville, "Software Engineering", Pearson Education, New Delhi, 8th Edition, 2011.
3. Bill Brykczynski, Richard D. Stutz, "Software Engineering- Project Management", Wiley-IEEE Computer Society, 2nd Edition, 2000.
4. Craig Larman, "Applying UML and Patterns: An Introduction to Object-Oriented Analysis and Design and Iterative Development", Pearson Education, 3rd Edition, 2008.
5. Jalote P, "An Integrated Approach to Software Engineering", Narosa Publishers, New Delhi, 3rd Edition 2013.

VII. ELECTRONICS RESOURCES:

1. https://onlinecourses.nptel.ac.in/noc19_cs52/preview
2. https://ece.iisc.ac.in/~parimal/2019/ml.html
3. http://www.springer.com/gp/book/9780387848570"www.springer.com/gp/book/9780387848570
4. http://www.cse.iitb.ac.in/~sunita/cs725/calendar.html"www.cse.iitb.ac.in/~sunita/cs725/calendar.html
5. https://cs.nyu.edu/~mohri/mlu11/

VIII. MATERIALS ONLINE

1. Course template
2. Tutorial question bank
3. Tech-talk topics
4. Open-ended experiments
5. Definitions and terminology
6. Assignments
7. Model question paper – I
8. Model question paper – II
9. Lecture notes
10. PowerPoint presentation
11. E-Learning Readiness Videos (ELRV)

COURSE CONTENT

DESIGN AND ANALYSIS OF ALGORITHMS LABORATORY								
IV Semester: CSE / IT / CSE (CS)								
Course Code	**Category**	**Hours / Week**			**Credits**	**Maximum Marks**		
ACSD16	**Core**	**L**	**T**	**P**	**C**	**CIA**	**SEE**	**Total**
		-	-	2	1	40	60	100
Contact Classes: Nil	**Tutorial Classes: Nil**	**Practical Classes: 45**				**Total Classes: 45**		
Prerequisites: **There are no prerequisites to take this course.**								

I. COURSE OVERVIEW:

Design and analysis of algorithm lab provides hands on experience in implementing different algorithmic paradigms and develops competence in choosing appropriate data structure to improve efficiency of technique used. This laboratory implements sorting techniques using divide and conquer strategy, shortest distance algorithms based on Greedy, Dynamic programming techniques, Minimum spanning tree construction and applications of Backtracking, Branch and Bound. This is essential for developing software in areas Information storage and retrieval, Transportation through networks, Graph theory and Optimization problems.

II. COURSE OBJECTIVES

The students will try to learn:

I. The selection of Algorithmic technique and Data structures required for efficient development of technical and engineering applications.
II. The algorithmic design paradigms and methods for identifying solutions of optimization problems.
III. Implementation of different algorithms for the similar problems to compare their performance.

III. COURSE OUTCOMES:

At the end of the course students should be able to:

CO1 Apply divide and conquer strategy to organize the data in ascending or descending order
CO2 Make use of algorithmic design paradigms to determine shortest distance and transitive closure of directed or undirected graphs
CO3 Utilize greedy technique for generating minimum cost spanning tree of a graph.
CO4 Compare the efficiencies of traversal problems using different tree and graph traversal algorithms.
CO5 Utilize backtracking method for solving puzzles involving building solutions incrementally.
CO6 Examine branch and bound approach for solving combinatorial optimization problems.

IV. COURSE CONTENT:

Week-I: QUICK SORT and MERGE SORT

a. Sort a given set of elements using the quick sort method and determine the time required to sort the elements. Repeat the experiment for different values of n, the number of elements in the 1st to be sorted and plot a graph of the time taken versus n. The elements can be read from a file or can be generated using the random number generator.
b. Implement merge sort algorithm to sort a given set of elements and determine the time required to sort the elements. Repeat the experiment for different values of n, the number of elements in the list to be sorted and plot a graph of the time taken versus n. The elements can be read from a file or can be generated using the random number generator.

Week-2: DIVIDE AND CONQUER

a. Given two binary strings that represent value of two integers, find the product of two strings using Karatsuba algorithm for fast multiplication. For example, if the first bit string is “1100” and second bit string is “1010”, output should be 120. For simplicity, let the length of two strings be same and be n.

b. Strassen's Matrix Multiplication is the divide and conquer approach to solve the matrix multiplication problems. The usual matrix multiplication method multiplies each row with each column to achieve the product matrix. The time complexity taken by this approach is $O(n^3)$, since it takes two loops to multiply. Strassen’s method was introduced to reduce the time complexity from $O(n^3)$ to $O(n^{\log 7})$.

Week-3:TREE TRAVERSAL ALGORITHMS

Perform various tree traversal algorithms for a given tree using Recursive and Non Recursive techniques.

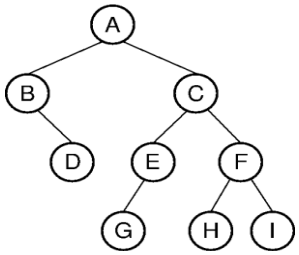

Week-4:GRAPH TRAVERSALS TECHNIQUES

a.Print all the nodes reachable from a given starting node in a digraph using BFS method.
b.Check whether a given graph is connected or not using DFS method

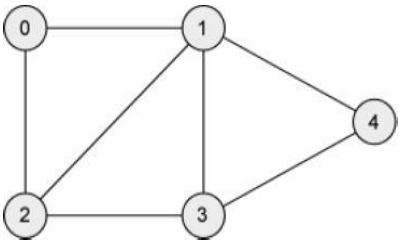

Week-5: MINIMUM COST SPANNING TREE

a.Find Minimum Cost Spanning Tree of a following undirected graph using Kruskal‘s algorithm.

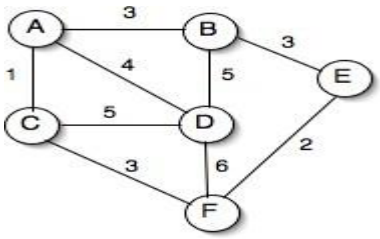

b.Find Minimum Cost Spanning Tree of a given undirected graph above using Prims Algorithm.

Week-6: SHORTEST PATHS ALGORITHM

From a given vertex in a weighted connected graph, find shortest paths from 0 to other vertices using Dijkstra‘s algorithm.

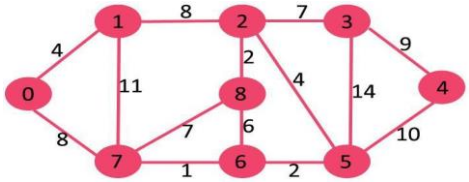

Week-7: JOB SEQUENCING WITH DEADLINES AND OPTIMAL STORAGE ON TAPES

Implement in python for obtaining optimal solution using Greedy approach for the following problems

a. Optimal Storage on Tapes is one of the applications in the Greedy Method. The objective of this algorithm is to find the Optimal retrieval time for accessing programs that are stored on tape. There are 'n' programs that are to be stored on a computer tape of length (L). Associated with each program (i) is a length (l)

Let the programs are stored in the order (I = i1, i2, i3, ...) such that all programs are retrieved equally That is their expected or Mean Retrieval Time (MRT) will be same.

b. Job scheduling algorithm is applied to schedule the jobs on a single processor to maximize the profits. The problem states that, “Given ‘n’ number of jobs with a starting time and ending time, they need to be scheduled in such a way that maximum profit is received within the maximum deadline”.

Week-8:ALL PAIRS SHORTEST PATHS and 0/1 KNAPSACK PROBLEMS

a.Implement All-Pairs Shortest Paths Problem using Floyd's algorithm

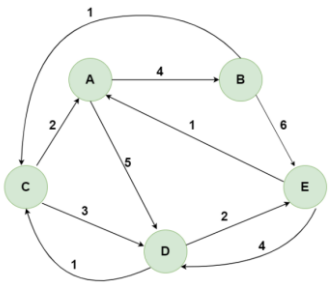

b.Find Optimal solution for 0/1 knapsack problem using Dynamic Programming Technique

Week-9: OPTIMAL BINARY SEARCH TREE

Write a Program to Construct optimal binary search for

(a1, a2, a3, a4) = (do, if, int, while),
p(1 : 4) = (3,3,1,1)
q(0 : 4)= (2,3,1,1,1)

Week-10: TRAVELLING SALES PERSON PROBLEM

Implement any scheme to find the optimal solution for the Traveling Sales Person problem and then solve the same problem instance using any approximation algorithm and determine the error in the approximation

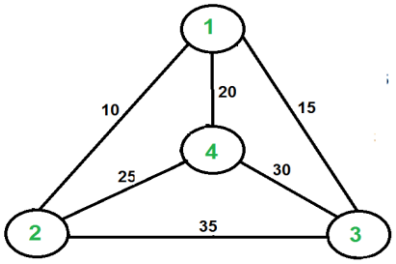

Week-11: SUM OF SUBSETS PROBLEM AND GRAPH COLORING PROBLEM

a. Find a subset of a given set S = {sl, s2,. , sn} of n positive integers whose sum is equal to a given positive integer d. For example, if S= {1, 2, 5, 6, 8} and d = 9 there are two solutions {1, 2, 6} and {1,8}.A suitable message is to be displayed if the given problem instance doesn't have a solution.

b. Implement a program to find Chromatic Number of Given Graph

Week-12:N MULTISTAGE GRAPH

Given a multistage graph, a source and a destination, find shortest path from source to destination (Forward Approach) and Destination to Source (Backward Approach). By convention, consider source at stage 1 and destination as last stage.

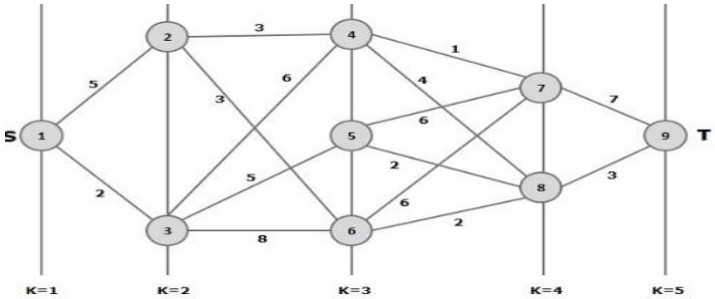

Week-13:N QUEENS PROBLEM and 8-PUZZLE PROBLEM

Implement N Queens Problem and 8-Puzzle problem in python using Branch and Bound Technique

V.TEXT BOOKS:

1. Karin R Saoub, *Graph Theory: An Introduction to Proofs, Algorithms, and Applications*, 1st edition, Chapman and Hall, 2021.
2. S S Sastry, *Introductory Methods of Numerical Analysis*, 5th edition, 2012.

VI.REFERENCE BOOKS:

1. Levitin A, "Introduction to the Design and Analysis of Algorithms", Pearson Education, 2008.
2. Goodrich, M.T. R Tomassia, "Algorithm Design foundations Analysis and Internet Examples", John Wiley and Sons, 2006.
3. Base Sara, Allen Van Gelder, "Computer Algorithms Introduction to Design and Analysis", Pearson, 3rd edition, 1999.

VII. ELECTRONICS RESOURCES

2. http://www.personal.kent.edu/~rmuhamma/Algorithms/algorithm.html
3. http://openclassroom.stanford.edu/MainFolder/CoursePage.php?course=IntroToAlgorithms
4. http://www.facweb.iitkgp.ernet.in/~sourav/daa.html

VIII. MATERIALS ONLINE

1. Course template
2. Lab Manual

COURSE CONTENT

WEB SYSTEMS ENGINEERING LABORATORY								
IV Semester: CSE / IT								
Course Code	**Category**	**Hours / Week**			**Credits**	**Maximum Marks**		
ACSD17	Core	**L**	**T**	**P**	**C**	**CIA**	**SEE**	**Total**
		0	0	2	1	40	60	100
Contact Classes: Nil	**Tutorial Classes: Nil**	**Practical Classes: 45**				**Total Classes: 45**		
Prerequisites: Programming with Objects								

I. COURSE OVERVIEW:

This course will give you the basic terminology and fundamental concepts to build modern web applications. This course introduces students to develop web applications. This course presents the basics of HTML5 and CSS3 for Web application development using HTML links and HTML forms. Introduction to the use of React router and its use in developing single-page applications, redux to develop React Redux powered applications, client-server communication and the use of REST API on the server side and react primitives render to native platform UI. This course will make the students to expose the front-end framework Bootstrap and to basic security mechanisms for server-side web application development.

II. COURSES OBJECTIVES:

The students will try to learn

I. The characteristics, systematic methods, model for developing web applications.
II. The concepts of client side programming with Bootstrap, JavaScript, Ajax, Design user interfaces that follow best practices for usability and user experience
III. Web application Development Database with React and React Native.

III. COURSE OUTCOMES:

At the end of the course students should be able to:

CO1 Create a web page with different layouts including links by applying different styles and colors to produce specified outputs
CO2 Develop a responsive web application using bootstrap with background images, menus, with admin panel and tables.
CO3 Develop interactive forms with different styles using javascript, CSS and bind data using AJAX
CO4 Develop single page applications using react router and make use of react data libraries for data visualization in dynamic pages
CO5 Adapt to design and develop web applications like drunken snake game and chat application with API responses using the industry's current models and architectures
CO6 Test for the database to extend the features and deployment of applications for solving problems that require interaction with a web server

IV.COURSE CONTENT:

Week – 1: HTML LAYOUTS AND LINKS

a. Develop a web application to control over different layouts.

b. Create a webpage with HTML describing your department use paragraph and list tags.

c. Apply various colors to suitable distinguish key words, also apply font styling like italics, underline and two other fonts to words you find appropriate, also use header tags.

d. Create links on the words e.g. "Wi-Fi" and "LAN" to link them to Wikipedia pages.

Week – 2: WEB APLLICATION DESIGN FORMTTING

a. Develop a web application with background banner image and navigation menus.

b. Develop a web application with responsive images.
c. Develop a web application using left menu.
d. Develop setting to change the theme of entire web Application.

Week – 3: INTRODUCTION TO RESPONSIVE INTERFACE USING BOOTSRAP.

a. Write code for developing responsive web application with Admin panel and tables with static data.

Week – 4: BUIDLING INTERFACES USING JAVASCRIPT

a. Set up the Folder Structure.
b. Write the Model code and initialize the application.
c. Implement the list objects and use cases.
d. Implement the create object use case.
e. Implement the update object use case.

Week – 5: INTRODUCTION TO INTERATIVE FORMS AND AJAX DATA BINIDNG

a. Developing Web Page Styles using JavaScript and CSS,
b. Develop Script interactive forms
c. Data binding using Ajax.

Week – 6: REACT ENVIRONMENT SETUP

a. Setting up development environment.
b. Integration with Existing Apps.
c. Running on Device.
d. Debugging
e. Testing
f. Write source code using Typescript.

Week – 7: PROGRAMMING WITH REACT

a. Basics Interactive examples.
b. Function Components and Class Components
c. React Native Fundamental, Handling Text Input,
d. Using a scroll View, using List View.
e. Platform Specific Code.

Week – 8: BUILD A DRUNKEN SNAKE GAME USING HOOKS

a. Introduction and scaffolding the project.
b. Components, Props and Styles.
c. State and Lifecycle Events.
d. Extended Game Functionality.
e. Finishing up and Deployment.

Week – 9: PHP SESSIONS BOX React FOR DATA VISUALIZATION

a. Introduction and scaffolding the Project.
b. Pages and Layout.
c. Working with an API, CSS-in-JS.
d. Dynamic Pages and React Hooks.
e. Custom React Hooks, Dynamic CSS-in-JS.
f. Finishing up and Deployment.

g. Optimization and PWA.

Week – 10: CHAT APPLICATION

a. Firebase Environment. Introduction and Scaffolding the project.

b. Private and Public pages, Context API.

c. Creating Side bar and Dashboard

d. Creating and displaying Chat Rooms.

e. Creating Layout for Chat page.

Week – 11: CHAT APPLICATION API RESPONSES

a. Context API Problem-solution for the chat messages.

b. Denormalization of the data to be stored in app.

c. Displaying chat feed for Interactive UI along with Real time user presence.

Week – 12: DATABASES HANDLING

a. Role Based Access.

b. Messages Likes and deletion.

c. File and Audio Chat Messages

d. Extended Chat Features and Deployment

V. TEXT BOOKS:

1. Thomas A. Powell, "*The Complete Reference*", "HTML and CSS", 5th edition, 2017
2. Elisabeth Robson , Eric Freeman,"*Head First HTML and CSS: A Learner's Guide to Creating Standards-Based Web Pages*", 2nd edition, 2012
3. Adam Boduchand Roy Derks, "*React and React Native*: A Complete Hands-on Guide to Modern Web and Mobile Development with React.js", 3rd edition, 2020.

VI. REFERENCE BOOKS:

1. W Hans Bergsten, "*Java Server Pages*", O'Reilly, 3rd edition, 2003.
2. D. Flanagan, "*Java Script*", O'Reilly, 6th edition, 2011.
3. Jon Duckett, "*Beginning Web Programming*", WROX, 2nd edition, 2008.

VII. ELECTRONICS RESOURCES:

1. https://www.codecademy.com/learn/paths/web-development/
2. https://nptel.ac.in/courses/106/105/106105084/
3. https://medium.com/@aureliomerenda/create-a-native-web-app-with-react-native-web419acac86b82
4. https://www.coursera.org/learn/react-native
5. https://desirecourse.net/react-native-and-redux-course-using-hooks

VIII. MATERIALS ONLINE

1. Course template
2. Lab Manual

COURSE CONTENT

DATABASE MANAGEMENT SYSTEMS LABORATORY								
II Semester: CSE / CSE (AI & ML) / CSE (DS) / CSE (CS) / IT								
Course Code	**Category**	**Hours / Week**			**Credits**	**Maximum Marks**		
AITD05	**Core**	**L**	**T**	**P**	**C**	**CIA**	**SEE**	**Total**
		0	0	2	1	40	60	100
Contact Classes: Nil	**Tutorial Classes: Nil**	**Practical Classes: 36**				**Total Classes: 36**		
Prerequisites: There are no prerequisites to take this course.								

I. COURSE OVERVIEW:

The purpose of this course is to provide a clear understanding of fundamentals with emphasis on their applications to create and manage large data sets. It highlights on technical overview of database software to retrieve data from n database. The course includes database design principles, normalization, concurrent transaction processing, security, recovery and file organization techniques.

II. COURSE OBJECTIVES:

The students will try to learn:

I. Implement the basic knowledge of SQL queries and relational algebra.
II. Construct database models for different database applications.
III. Apply normalization techniques for refining of databases.
IV. Practice various triggers, procedures, and cursors using PL/SQL.

III. COURSE OUTCOMES:

After successful completion of the course, students should be able to:

CO 1 : Construct the schema of the database and modify it.
CO 2 : Compile a query to obtain the aggregated result from the database
CO 3 : Speculate the concepts of various database objects.
CO 4 : Compare the use of procedure and function in database.
CO 5 : Use triggers and packages to create applications in the database.

IV. ACOURSES CONTENT:

Week–1: QUERIES USING DDL AND DML

1. Create a table called Employee with the following structure

Name	Type
Empno	Number
Ename	Varchar2(20)
Job	Varchar2(20)
Mgr	Number
Sal	Number

a. Add a column commission with domain to the Employee table.
b. Insert any five records into the table.
c. Update the column details of job
d. Rename the column of Employ table using alter command.
e. Delete the employee whos emp no is19.

2. **Create department table with the following structure**

.

Name	**Type**
Dept no	Number
Dept name	Varchar2(20)
Location	Varchar2(20)

a. Add column designation to the department table.
b. Insert values into the table.
c. List there cords of emp table grouped by dept no.
d. Update there cord where dept no is 9.
e. Delete any column data from the table.

3. **Create a table called Customer table**

Name	**Type**
Custname	Varchar2(20)
Custstreet	Varchar2(20)
Custcity	Varchar2(20)

Insert records into the table.

a. Add salary column to the table.
b. Alter the table column domain.
c. Drop salary column of the customer table.
d. Delete the rows of customer table whose cust_cit is „hyd".

4. **Create a table called branch table**

Name	**Type**
Branchname	Varchar2(20)
Branchcity	Varchar2(20)
Asserts	Number

a. Increase the size of data type for asserts to the branch.
b. Add and drop a column to the branch table.
c. Insert values to the table.
d. Update the branch name column.
e. Delete any two columns from the table.

5. a. Create a user and grant all permissions to the user.
b. Use revoke command to remove user permissions.
c. Change password of the user created.
d. Add constraint foreign key and not null.
e. Insert records in the Customer table and use commit.

6. a. Create a user and grant all permissions to the user.
b. Update the table Branch and use save point and rollback.
c. Add constraint primary key , foreign key and not null to the Branch table
d. Delete constraint not null to the table column.

Week – 2: QUERIES USING AGGREGATE FUNCTIONS

1. a. By using the group by clause, display the enames who belongs to dept no 10 along with average salary.

b. Display lowest paid employee details under each department.

c. Display number of employees working in each department and their department number.

d. Using built in functions, display number of employees working in each department and their department name from dept

table. Insert dept name to dept table and insert dept name for each row, do the required thing specified above.

e. List all employees which start with either B or C.

f. Display only these ename of employees where the maximum salary is greater than or equal to 5000.

2. a. Calculate the average salary for each different job.

b. Show the average salary of each job excluding manager.

c. Show the average salary for all departments employing more than three people.

d. Display employees who earn more than the lowest salary in department 30

e. Show that value returned by sign (n) function.

f. How many days between day of birth to current date.

3. a. Show that two substring as single string.

b. List all employee names, salary and 15% rise in salary.

c. Display lowest paid emp details under each manager

d. Display the average monthly salary bill for each deptno.

e. Show the average salary for all departments employing more than two people.

f. By using the group by clause, display the eid who belongs to deptno 05 along with average salary.

4. a. Count the number of employees in department 20

b. Find the minimum salary earned by clerk.

c. Find minimum, maximum, average salary of all employees.

d. List the minimum and maximum salaries for each job type.

e. List the employee names in descending order.

f. List the employee id, names in ascending order by empid.

5. a. Find the sids ,names of sailors who have reserved all boats called “INTERLAKE Find the age of youngest sailor who is eligible to vote for each rating level with at least two such sailors.

b. Find the sname , bid and reservation date for each reservation.

c. Find the ages of sailors whose name begin and end with B and has at least 3 characters.

d. List in alphabetic order all sailors who have reserved red boat.

e. Find the age of youngest sailor for each rating level.

6. a. List the Vendors who have delivered products within 6 months from order date.

b. Display the Vendor details who have supplied both Assembled and Sub parts.

c. Display the Sub parts by grouping the Vendor type (Local or Non Local).

d. Display the Vendor details in ascending order.

e. Display the Sub part which costs more than any of the Assembled parts.

f. Display the second maximum cost Assembled part.

Week – 3: JOINS, SET OPERATORS

1. Display all the employees and the departments implementing a left outer join Display the employee name and department name in which they are working implementing a full outer join
2. Write a query to display their employee names and their managers' name and salary for every employee
3. Write a query to output the name, job, emp no, dept name and location for each dept, even if there are no employees
4. Display the details of those who draw the same salary.

Week – 4: PROGRAMS ON PL/SQL

1. a. Write a PL/SQL program to swap two numbers.

   b. Write a PL/SQL program to find the largest of three numbers

2. a. Write a PL/SQL program to find the total and average of 6 subjects and display the grade.

   b. Write a PL/SQL program to find the sum of digits in a given number.

3. a. Write a PL/SQL program to display the number in reverse order.

   b. Write a PL / SQL program to check whether the given number is prime or not.

4. a. Write a PL/SQL program to find the factorial of a given number.

   b. Write a PL/SQL code block to calculate the area of a circle for a value of radius varying from 3 to 7. Store the radius and the corresponding values of calculated area in an empty table named areas, consisting of two columns radius and area.

5. a. Write a PL/SQL program to accept a string and remove the vowels from the string. (When „hello" passed to the program it should display „Hll" removing e and o from the world Hello).

   b. Write a PL/SQL program to accept a number and a divisor. Make sure the divisor is less than or equal to 10. Else display an error message. Otherwise Display the remainder in words.

Week – 5: PROCEDURES AND FUNCTIONS

1. Write a function to accept employee number as parameter and return Basic +HRA together as single column.
2. Accept year as parameter and write a Function to return the total net salary spent for a given year.
3. Create a function to find the factorial of a given number and hence find NCR
4. Write a PL/SQL block o pint prime Fibonacci series using local functions.
5. Create a procedure to find the lucky number of a given birth date. 6. Create function to the reverse of given number.

Week – 6: TRIGGERS

Create a row level trigger for the customers table that would fire for INSERT or UPDATE or DELETE operations performed on the CUSTOMERS table. This trigger will display the salary difference between the old values and new values:

CUSTOMERS table:

ID	NAME	AGE	ADDRESS	SALARY
1	Alive	24	Khammam	2000
2	Bob	27	Kadappa	3000
3	Catri	25	Guntur	4000
4	Dena	28	Hyderabad	5000
5	Eeshwar	27	Kurnool	6000
6	Farooq	28	Nellur	7000

2. Creation of insert trigger, delete trigger, update trigger practice triggers using the passenger database. Passenger(Passport_ id INTEGER PRIMARY KEY, Name VARCHAR (50) Not NULL, Age Integer Not NULL, Sex Char, Address VARCHAR (50) Not NULL);

a. Write a Insert Trigger to check the Passport_id is exactly six digits or not.

b. Write a trigger on passenger to display messages „1 Record is inserted‟, „1 record is deleted‟, „1 record is updated‟ when insertion, deletion and updation are done on passenger respectively.

Insert row in employee table using Triggers. Every trigger is created with name any trigger have same name must be replaced by new name. These triggers can raised before insert, update or delete rows on data base. The main difference between a trigger and a stored procedure is that the former is attached to a table and is only fired when an INSERT,

3. UPDATE or DELETEoccurs.

4. Convert employee name into uppercase whenever an employee record is inserted or updated. Trigger to fire before the insert or update.

5. Trigger before deleting a record from emp table. Trigger will insert the row to be deleted into table called delete _emp and also record user who has deleted the record and date and time of delete.

6. Create a transparent audit system for a table CUST_MSTR. The system must keep track of the records that are being deleted or updated.

Week – 7: PROCEDURES

1. Create the procedure for palindrome of given number.

2. Create the procedure for GCD: Program should load two registers with two Numbers and then apply the logic for GCD of two numbers. GCD of two numbers is performed by dividing the greater number by the smaller number till the remainder is zero. If it is zero, the divisor is the GCD if not the remainder and the divisors of the previous division are the new set of two numbers. The process is repeated by dividing greater of the two numbers by the smaller number till the remainder is zero and GCD is found.

3. Write the PL/SQL programs to create the procedure for factorial of given number.

4. Write the PL/SQL programs to create the procedure to find sum of N natural number.

5. Write the PL/SQL programs to create the procedure to find Fibonacci series.

6. Write the PL/SQL programs to create the procedure to check the given number is perfect or not.

Week – 8: CURSORS

1. Write a PL/SQL block that will display the name, dept no, salary of fist highest paid employees.

2. Update the balance stock in the item master table each time a transaction takes place in the item transaction table. The change in item master table depends on the item id is already present in the item master then update operation is performed to decrease the balance stock by the quantity specified in the item transaction in case the item id is not present in the item master table then the record is inserted in the item master table.

3. Write a PL/SQL block that will display the employee details along with salary using cursors.

4. To write a Cursor to display the list of employees who are working as a Managers or Analyst.

5. To write a Cursor to find employee with given job and deptno.

6. Write a PL/SQL block using implicit cursor that will display message, the salaries of all the employees in the „employee‟ table are updated. If none of the employee‟s salary are updated we get a message 'None of the salaries were updated'. Else we get a message like for example, 'Salaries for 1000 employees are updated' if there are 1000 rows in „employee‟ table.

Week – 9: CASE STUDY:

BOOK PUBLISHING COMPANY A publishing company produces scientific books on various subjects. The books are written by authors who specialize in one particular subject. The company employs editors who, not necessarily being specialists in a particular area, each take sole responsibility for editing one or more publications. A publication covers essentially one of the specialist subjects and is normally written by a single author. When writing a particular book, each author works with on editor, but may submit another work for publication to be supervised by other editors. To improve their competitiveness, the company tries to employ a variety of authors, more than one author being a specialist in a particular subject for the above case study, do the following:

1. Analyze the data required.

2. Normalize the attributes. Create the logical data model using E-R diagrams

Week – 10: CASE STUDY GENERAL HOSPITAL

A General Hospital consists of a number of specialized wards (such as Maternity, Pediatric, Oncology,etc). Each ward hosts a number of patients, who were admitted on the recommendation of their own GP and confirmed by a consultant employed by the Hospital. On admission, the personal details of every patient are recorded. A separate register is to be held to store the information of the tests undertaken and the results of a prescribed treatment. A number of tests may be conducted for each patient. Each patient is assigned to one leading consultant but may be examined by another doctor, if required. Doctors are specialists in some branch of medicine and may be leading consultants for a number of patients, not necessarily from the same ward. For the above case study, do the following.

1. Analyze the data required.
2. Normalize the attributes. Create the logical data model using E-R diagrams

Week – 11: CASE STUDY: CAR RENTAL COMPANY

A database is to be designed for a car rental company. The information required includes a description of cars, subcontractors (i.e. garages), company expenditures, company revenues and customers. Cars are to be described by such data as: make, model, year of production, engine size, fuel type, number of passengers, registration number, purchase price, purchase date, rent price and insurance details. It is the company policy not to keep any car for a period exceeding one year. All major repairs and maintenance are done by subcontractors (i.e. franchised garages), with whom CRC has long-term agreements. Therefore the data about garages to be kept in the database includes garage names, addresses, range of services and the like. Some garages require payments immediately after a repair has been made; with others CRC has made arrangements for credit facilities. Company expenditures are to be registered for all outgoings connected with purchases, repairs, maintenance, insurance etc. Similarly the cash inflow coming from all sources: Car hire, car sales, insurance claims must be kept of file. CRC maintains a reasonably stable client base. For this privileged category of customers special credit card facilities are provided. These customers may also book in advance a particular car. These reservations can be made for any period of time up to one month. Casual customers must pay a deposit for an estimated time of rental, unless they wish to pay by credit card.

All major credit cards are accepted. Personal details such as name, address, telephone number, driving license, number about each customer are kept in the database. For the above case study, do the following:

1. Analyze the data required.
2. Normalize the attributes. Create the logical data model using E-R diagrams

Week – 12: CASE STUDY: STUDENT PROGRESS MONITORING SYSTEM

A database is to be designed for a college to monitor students' progress throughout their course of study. The students are reading for a degree (such as BA, BA (Hons) M.Sc., etc) within the framework of the modular system. The college provides a number of modules, each being characterized by its code, title, credit value, module leader, teaching staff and the department they come from. A module is coordinated by a module leader who shares teaching duties with one or more lecturers. A lecturer may teach (and be a module leader for) more than one module. Students are free to choose any module they wish but the following rules must be observed: Some modules require pre- requisites modules and some degree programmes have compulsory modules. The database is also to contain some information about students including their numbers, names, addresses, degrees they read for, and their past performance i.e. modules taken and examination results. For the above case study, do the following:

1. Analyze the data required.
2. Normalize the attributes.
3. Create the logical data model i.e., ER diagrams.
4. Comprehend the data given in the case study by creating respective tables with primary keys and foreign keys wherever required.
5. Insert values into the tables created (Be vigilant about Master- Slavetables).
6. Display the Students who have taken M.Sc course.

7. Display the Module code and Number of Modules taught by each Lecturer.

8. Retrieve the Lecturer names who are not Module Leaders.

9. Display the Department name which offers „English‟ module.

10. Retrieve the Prerequisite Courses offered by every Department (with Department names).

11. Present the Lecturer ID and Name who teaches „Mathematics‟

12. Discover the number of years a Module is taught.

13. List out all the Faculties who work for „Statistics‟ Department.

14. List out the number of Modules taught by each Module Leader.

15. List out the number of Modules taught by a particular Lecturer.

16. Create a view which contains the fields of both Department and Module tables. (Hint- The fields like

Module code, title, credit, Department code and its name).

17. Update the credits of all the prerequisite courses to 5. Delete the Module „History‟ from the Module table

V.TEXT BOOKS:

1. Abraham Silberschatz, Henry F.Korth, S.Sudarshan, "Database System Concepts", McGraw-Hill, 6th edition, 2017.

VI.REFERENCE BOOKS:

1. Ramez Elmasri, Shamkant, B. Navathe, "Database Systems", Pearson Education, 6th edition, 2013.
2. Peter Rob, Carles Coronel, "Database System Concepts", Cengage Learning, 7th edition, 2008.

VII.ELECTRONICS RESOURCES

1. http://www.scoopworld.in

VIII. MATERIALS ONLINE

1. Course template
2. Lab Manual

UNDERTAKING BY STUDENT / PARENT

"To make the students attend the classes regularly from the first day of starting of classes and be aware of the College regulations, the following undertaking form is introduced which should be signed by both student and parent. The same should be submitted to the Dean of Academic".

I, Mr. / Ms. ---------- joining I Semester / III Semester for the academic year 20 - 20 / 20 - 20 in Institute of Aeronautical Engineering, Hyderabad, do hereby undertake and abide by the following terms, and I will bring the ACKNOWLEDGEMENT duly signed by me and my parent and submit it to the Dean of Academic.

1. I will attend all the classes as per the timetable from the starting day of the semester specified in the institute Academic Calendar. In case, I do not turn up even after two weeks of starting of classes, I shall be ineligible to continue for the current academic year.
2. I will be regular and punctual to all the classes (theory/laboratory/project) and secure attendance of not less than 75% in every course as stipulated by Institute. I am fully aware that an attendance of less than 65% in more than 60% of theory courses in a semester will make me lose one year.
3. I will compulsorily follow the dress code prescribed by the college.
4. I will conduct myself in a highly disciplined and decent manner both inside the classroom and on campus, failing which suitable action may be taken against me as per the rules and regulations of the institute.
5. I will concentrate on my studies without wasting time in the Campus/Hostel/Residence and attend all the tests to secure more than the minimum prescribed Class/Sessional Marks in each course. I will submit the assignments given in time to improve my performance.
6. I will not use Mobile Phone in the institute premises and also, I will not involve in any form of ragging inside or outside the campus. I am fully aware that using mobile phone to the institute premises is not permissible and involving in Ragging is an offence and punishable as per JNTUH/UGC rules and the law.
7. I declare that I shall not indulge in ragging, eve-teasing, smoking, consuming alcohol drug abuse or any other anti-social activity in the college premises, hostel, on educational tours, industrial visits or elsewhere.
8. I will pay tuition fees, examination fees and any other dues within the stipulated time as required by the Institution / authorities, failing which I will not be permitted to attend the classes.
9. I will not cause or involve in any sort of violence or disturbance both within and outside the college campus.
10. If I absent myself continuously for 3 days, my parents will have to meet the HOD concerned / Principal.
11. I hereby acknowledge that I have received a copy of BT23 Academic Rules and Regulations, course catalogue and syllabus copy and hence, I shall abide by all the rules specified in it.

ACKNOWLEDGEMENT

I have carefully gone through the terms of the undertaking mentioned above and I understand that following these are for my/his/her own benefit and improvement. I also understand that if I/he/she fail to comply with these terms, shall be liable for suitable action as per Institute/JNTUH/AICTE/UGC rules and the law. I undertake that I/he/she will strictly follow the above terms.

Signature of Student with Date

Signature of Parent with Date
Name & Address with Phone Number